Instruction Manual

GV Dry Vacuum Pumps

Description	*Item Number*
GV250 Dry Vacuum Pump, 380/400/415 V, 50 Hz	*A705-61-900*
GV250 Dry Vacuum Pump, 230/460 V, 60 Hz	*A705-61-908*
GV400 Dry Vacuum Pump, 380/400/415 V, 50 Hz	*A706-61-900*
GV400 Dry Vacuum Pump, 230/460 V, 60 Hz	*A707-61-908*

BOC EDWARDS

This page intentionally blank.

CONTENTS

Section		Page
1	INTRODUCTION	1
1.1	Scope and definitions	1
1.2	The GV pumps	1
1.3	Gas system	1
1.4	Cooling system	2
1.5	Interstage relief valve	2
1.6	Drive operation	4
1.7	Liquid pumping capability	4
1.8	Safe area operation	4
1.9	Accessories	4
2	TECHNICAL DATA	5
2.1	Operating and storage conditions	5
2.2	Performance	5
2.3	Mechanical data	5
2.4	Electrical data	6
2.5	Cooling system	6
2.6	Lubrication data	7
2.7	Shaft-seals purge system	7
2.8	Connections	7
2.9	Noise data	7
3	INSTALLATION	9
3.1	Safety	9
3.2	System design	9
3.3	Unpack and inspect	10
3.4	Locate the pump	10
3.5	Check the gearbox oil-level	11
3.6	Electrical connections	11
3.6.1	Introduction	11
3.6.2	Connect the electrical supply to the pump: 380/400/415 V, 50 Hz supplies	11
3.6.3	Connect the electrical supply to the pump: 230/460 V, 60 Hz supplies	13
3.6.4	Connect to the thermal snap-switches	15
3.7	Check the direction of rotation	16
3.8	Fit a mechanical booster pump (optional)	16
3.9	Connect the cooling-water supply	16
3.10	Connect the shaft-seals purge and gas-ballast gas supplies	18
3.10.1	Introduction	18
3.10.2	Connect the shaft-seals purge air or nitrogen supply	18
3.10.3	Connect a nitrogen gas-ballast supply (optional)	19
3.11	Connect the pump-inlet	19
3.12	Connect the pump outlet	20
3.13	Leak test the system	20
3.14	Commission the pump	20

Ipsitech 8173-04

CONTENTS (CONTINUED)

Section		Page
4	OPERATION	23
4.1	Start the pump	23
4.2	Allow the pump to warm up	23
4.3	Check the purge pressures and flows	24
4.4	Shut down the pump	24
5	MAINTENANCE	25
5.1	Safety information	25
5.2	Maintenance plan	25
5.3	Check the gearbox oil-level and fill the gearbox with oil (if necessary)	27
5.4	Inspect the gas ballast system	27
5.5	Inspect the pipelines and connections	28
5.6	Inspect the interstage relief valve and replace the hinge bushes, valve flap and valve 'O' ring (if necessary)	28
5.7	Change the gearbox oil and clean the oil-level sight-glasses	30
5.8	Relubricate the high-vacuum bearings	32
5.9	Flush the cooling jacket	34
5.10	Replace the interstage relief valve	35
5.11	Replace the pump-motor	35
5.11.1	Remove the pump-motor	35
5.11.2	Fit the new pump-motor	36
5.12	Replace the coupling insert	38
5.13	Relubricate the motor bearings	39
5.13.1	General requirements	39
5.13.2	Relubrication intervals	39
5.14	Replace the motor bearings	40
5.15	Overhaul the pump	40
5.16	Fault finding	40
6	STORAGE AND DISPOSAL	43
6.1	Storage	43
6.2	Disposal	43
7	SPARES, SERVICE AND ACCESSORIES	45
7.1	Introduction	45
7.2	Service	45
7.3	Spares and maintenance kits	45
7.4	Accessories	45
7.4.1	Exhaust Silencers	45
7.4.2	Exhaust-Purge Kit	45
7.4.3	Booster Connection Kits	45
7.4.4	Indirect Cooling Kits	45
7.4.5	Other accessories	46
	RETURN OF BOC EDWARDS EQUIPMENT	

ILLUSTRATIONS

Figure		Page
1	The GV pump	3
2	Pump dimensions	8
3	Schematic diagram of the recommended electrical connections	12
4	Electrical connections: 380/400/415 V, 50 Hz electrical supplies	13
5	Electrical connections: 230/460 V, 60 Hz electrical supplies	14
6	Connect to the thermal snap-switches	17
7	Exploded view of the gas-ballast assembly	21
8	Exploded view of the gas-ballast air filter	28
9	Exploded view of the interstage relief valve	29
10	Oil-level sight-glass and oil filler and drain ports	31
11	Relubricate the high vacuum bearings	33
12	Exploded view of the pump-motor, coupling drive and coupling housing	37

TABLES

Table		Page
1	Operating and storage conditions	5
2	Performance data	5
3	Mechanical data	5
4	Electrical data	6
5	Cooling system data	6
6	Lubrication data	7
7	Shaft-seals purge system data	7
8	Connections data	7
9	Noise data	7
10	Checklist of items	10
11	Maintenance plan	26
12	Recommended frequencies for high-vacuum bearing relubrication	32
13	Motor relubrication grease required	39
14	Motor bearing relubrication intervals	39
15	Fault finding	41
16	Spares Item Numbers	47
17	Accessory Item Numbers	47

This page intentionally blank.

1 INTRODUCTION

1.1 Scope and definitions

This manual provides installation, operation and maintenance instructions for the BOC Edwards GV Dry Vacuum Pumps (abbreviated to GV pump(s) or pump(s) in the remainder of this manual). You must use the GV pumps as specified in this manual.

Read this manual before you install and operate your pump. Important safety information is highlighted as WARNING and CAUTION instructions; you must obey these instructions. The use of WARNINGS and CAUTIONS is defined below.

WARNING

Warnings are given where failure to observe the instruction could result in injury or death to people.

CAUTION

Cautions are given where failure to observe the instruction could result in damage to the equipment, associated equipment and process.

The following IEC warning labels appear on the pump:

Warning - refer to accompanying documentation.

Warning - risk of electric shock.

Warning - hot surfaces.

The units used throughout this manual conform to the SI international system of units of measurement. Where appropriate, US equivalent units of measurement are also given.

1.2 The GV pumps

Refer to Figure 1. The GV pumps are rugged, reliable dry vacuum pumps designed for general vacuum use.

The pump is a three-stage, positive displacement rotary pump in which pairs of intermeshing rotors (mounted on common shafts) are held in correct phase relation by a pair of timing-gears. The timing-gears and the adjacent double-row angular contact ball bearings are oil lubricated.

The pump has lifting-bolts (5) and is mounted on a robust frame (9). Fixing holes (8) in the frame can be used to secure the pump frame in its operating position.

1.3 Gas system

Refer to Figure 1. The pump has a shaft-seals purge system and a gas-ballast system.

You can connect a dry compressed air supply to the shaft-seals purge inlet (22). The shaft-seals purge pipeline then delivers the dry air purge to the shaft-seals. This dry air purge: ensures that the shaft-seals are maintained at a positive pressure during pump operation; prevents the entry of corrosive or toxic process vapours into the pump gearbox; prevents contamination of the process gases by pump oil; prevents damage to the shaft-seals by debris.

As supplied, the gas-ballast system can deliver ambient air to the pump gas-ballast inlet. The air-flow is filtered and is controlled by a valve (10). A check-valve (Figure 7, item 10) prevents the escape of process gases out of the gas-ballast system into the local atmosphere.

If required for your application, you can connect dry nitrogen supplies to the pump, to deliver nitrogen gas-ballast and nitrogen shaft-seals purge instead of air: refer to Section 3.10.

1.4 Cooling system

Note: The direct cooling system fitted to the pump is suitable for pump operating temperatures (measured at the position shown in Figure 1, item 3) of up to 45 °C, (113 °F). If your application requires pump operating temperatures of 45 to 90 °C (113 to 194 °F), we recommend that you fit an Indirect Cooling Kit accessory: refer to Section 7.4.4.

Refer to Figure 1. The pump has a direct cooling system, in which cooling-water (connected through the water inlet, 7) circulates around the pump-body and then passes out of the pump through the outlet (2). The pump-motor (16) is air-cooled by an integral cooling-fan (19).

A thermal snap-switch box (4) is fitted to the pump-body. The snap-switch box has two thermal snap-switches:

- The output of the warning thermal snap-switch will go open circuit when the temperature of the pump-body is higher than normal. Use this output to provide a warning of high pump temperature.
- The output of the shut-down thermal snap-switch will go open circuit when the temperature of the pump-body is too high. Use this output to shut-down the pump when it is too hot.

1.5 Interstage relief valve

The pump has an interstage relief valve (12) fitted in a pipe between the pump-outlet and the last stage of the pump. The valve is normally held closed by its own weight, but opens depending on the pump-inlet pressure, as follows:

- At pump-inlet pressures of 300 mbar (3×10^4 Pa, 225 torr) and above on the GV250, and at pump-inlet pressures of 200 mbar (2.0×10^4 Pa, 150 torr) and above on the GV400, the interstage pressure forces the valve open. This allows process gases to pass directly from the second stage into the pump-outlet, without compression in the third stage of the pump.
- At pump-inlet pressures below those specified above, the interstage pressure is low and the valve is held closed. Process gases pass through all stages of the pump; that is, the process gases are compressed in the third stage before they pass into the pump-outlet.

The interstage relief valve allows the pump to provide a constant pumping speed from atmospheric pressure down to 10 mbar (1×10^3 Pa, 7.5 torr) and also prevents excessive electrical power consumption by the pump-motor when the pump starts.

---

1. Gearbox
2. Cooling-water outlet
3. Temperature measurement point
4. Thermal snap-switch box
5. Lifting-bolt
6. Pump-inlet
7. Cooling-water inlet
8. Fixing-holes
9. Frame
10. Gas-ballast flow valve
11. Exhaust-purge port (blanked)
12. Interstage relief valve
13. Pump-outlet
14. Oil-level sight-glass
15. Coupling cover
16. Pump-motor
17. Arrow showing motor rotation direction
18. Correct direction of rotation arrow
19. Motor cooling-fan
20. Oil drain-plug
21. Oil filler-plug
22. Shaft-seals purge inlet

Figure 1 - The GV pump: key

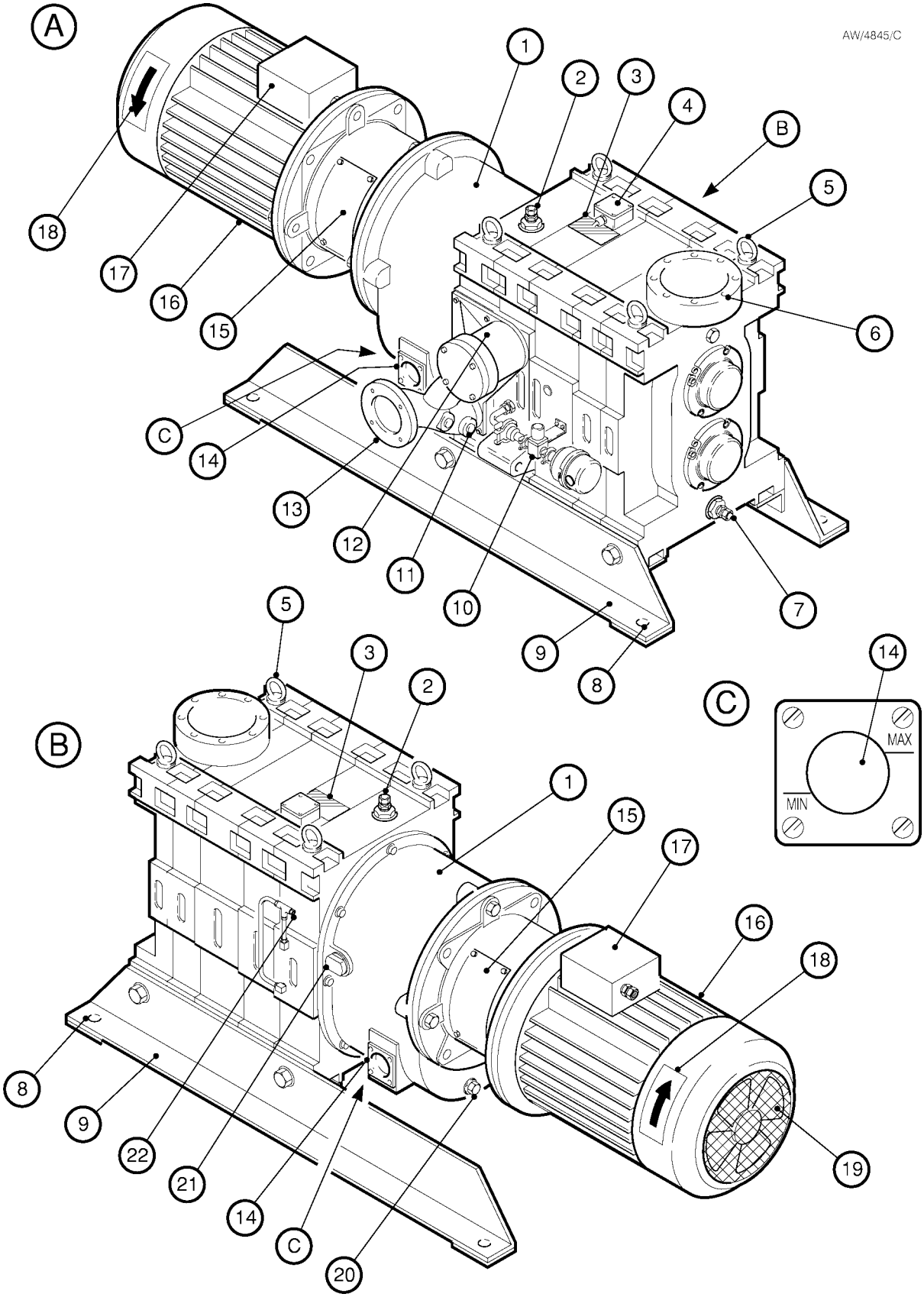

Figure 1 - The GV pump

1.6 Drive operation

The pump has a flexible drive coupling which transmits the drive from the pump-motor (16) to the pump rotors.

Refer to Figure 12. A coupling hub (14) is fitted to the pump shaft (9) and a drive hub (16) is fitted to the motor shaft (18). A coupling insert (15) fits between the coupling and drive hubs.

The drive hub incorporates a number of drilled holes. With a coupling cover (12) removed, you can fit a steel rod (or other suitable tool) to one of these holes, and you can then manually turn the drive shaft, and so turn the pump. This facility is useful if, for example, you need to drain fluid from the pump following a hydraulic lock (see Table 15).

1.7 Liquid pumping capability

The GV pump can survive the ingress of some liquid (after a process failure condition, for example) without damage, however the pump is not suitable for continuous pumping of liquids.

If you want to continuously pump a liquid stream, contact your supplier or BOC Edwards for advice.

1.8 Safe area operation

You must **not** use the GV pump in the following hazardous areas:

- Zone 0, Zone 1 or Zone 2 (gases), or Zone Z (10) or Zone Y (11) (dusts), as classified by European authorities.
- Division 1 or Division 2 (gases and dusts), as classified by North American authorities.

These hazardous areas require the use of flameproof equipment. If you need a pump which can operate in these areas, contact your supplier or BOC Edwards for advice.

1.9 Accessories

A number of accessories are available for the GV pumps; use these to configure the pump for specific applications. These accessories are listed in Section 7.4.

2 TECHNICAL DATA

2.1 Operating and storage conditions

Ambient operating temperature range	0 to 40 °C, 32 to 104 °F
Maximum ambient operating humidity	90% RH
Warm-up time to pump operating temperature of 40 °C (104 °F), with a cooling-water flow rate of 150 l h^{-1} (33 US gal h^{-1}) *	30 min
Area classification in accordance with BS 5345 (standard pumps)	Safe Area designation only

* Pump operating temperature is measured at the point shown in Figure 1, item 3. For pump operating temperatures higher than 45 °C (113 °F), we recommend that you fit an Indirect Cooling Kit with a TCV: refer to Section 7.4.4.

Table 1 - Operating and storage conditions

2.2 Performance

	GV250	**GV400**
Maximum pumping speed		
50 Hz electrical supply	260 m^3 h^{-1}	385 m^3 h^{-1}
60 Hz electrical supply	177 cfm	250 cfm
Displacement (swept volume)		
50 Hz electrical supply	315 m^3 h^{-1}	540 m^3 h^{-1}
60 Hz electrical supply	223 cfm	350 cfm
Motor rotational speed		
50 Hz electrical supply	1410 r min^{-1}	1410 r min^{-1}
60 Hz electrical supply	1720 r min^{-1}	1720 r min^{-1}
Ultimate vacuum		
50 Hz electrical supply	4 x 10^{-1} mbar, 40 Pa	4 x 10^{-1} mbar, 40 Pa
60 Hz electrical supply	0.15 torr	0.15 torr
Maximum outlet pressure		
50 Hz electrical supply	1.3 bar abs, 1.3 x 10^5 Pa	1.15 bar abs, 1.15 x 10^5 Pa
60 Hz electrical supply	975 torr	862 torr
Typical pump rotation speed		
50 Hz electrical supply	2940 r min^{-1}	2940 r min^{-1}
60 Hz electrical supply	3580 r min^{-1}	3580 r min^{-1}

Table 2 - Performance data

2.3 Mechanical data

	GV250	**GV400**
Dimensions	See Figure 2	See Figure 2
Mass (without oil)		
50 Hz electrical supply	626 kg	714 kg
60 Hz electrical supply	1381 lbs	1564 lbs

Table 3 - Mechanical data

2.4 Electrical data

Electrical supply	380/400/415 V, 50 Hz or 230/460 V, 60 Hz	
Thermal snap-switch contact ratings		
Maximum voltage	240 V	
Maximum load (inductive)	120 VA	
Maximum current (resistive load)	12 A	
	GV250	**GV400**
Pump motor rating		
50 Hz electrical supply	11.0 kW	18.5 kW
60 Hz electrical supply	20 h. p.	30 h. p.
Full load current		
230 V, 60 Hz electrical supply	45.8 A	71.0 A
380 V, 50 Hz electrical supply	20.8 A	34.5 A
400 V, 50 Hz electrical supply	19.8 A	32.9 A
415 V 50 Hz electrical supply	19.2 A	31.7 A
460 V, 60 Hz electrical supply	22.9 A	33.8 A
Motor no-load current		
230 V, 60 Hz electrical supply	13.8 A	17.0 A
380 V, 50 Hz electrical supply	6.3 A	10.0 A
400 V, 50 Hz electrical supply	7.0 A	10.8 A
415 V 50 Hz electrical supply	7.1 A	10.2 A
460 V, 60 Hz electrical supply	6.9 A	8.3 A

Table 4 - Electrical data

2.5 Cooling system

Cooling system type	Direct water-cooling	
Cooling-water supply		
Supply temperature range	5 to 35 °C, 41 to 95 °F	
Maximum supply pressure	10 bar, 1 x 10^6 Pa, 7500 torr	
Maximum required pressure differential across supply and return	2 bar, 2 x 10^5 Pa, 1500 torr	
Warning thermal snap-switch		
Opening temperature	68 °C, 154 °F	
Closing temperature	62 °C, 144 °F	
Shut-down thermal snap-switch		
Opening temperature	75 °C, 167 °F	
Closing temperature	64 °C, 147 °F	
	GV250	**GV400**
Typical heat removed from pump by cooling-water		
50 Hz electrical supply	5 kW	5 kW
60 Hz electrical supply	17150 btu	17100 btu
Maximum water consumption with pump operating temperature of 40 °C/104 °F *		
50 Hz electrical supply	240 l h^{-1}	240 l h^{-1}
60 Hz electrical supply	63.4 US gal h^{-1}	63.4 US gal h^{-1}

* Pump at ultimate vacuum with a cooling-water supply temperature of 20 °C (68 °F) and an ambient temperature of 20 °C (68 °F).

Table 5 - Cooling system data

2.6 Lubrication data

Note: BOC Edwards Material Safety Data Sheets for the recommended oil and grease specified in Table 6 are available on request.

Recommended gearbox oil	Mobil SHC629 Antiwear Synthetic Gear Oil 150 cst
Gearbox oil capacity	
Minimum	1.4 litres, 0.37 US gal
Maximum	1.6 litres, 0.42 US gal
High vacuum bearings	
Grease type	Perfluoropolyether
Recommended grease	Fomblin RT15

Table 6 - Lubrication data

2.7 Shaft-seals purge system

Purge gas	Air or nitrogen
Regulated pressure of purge to shaft-seals	0.35 to 0.5 bar (5 to 7 psi) above exhaust back-pressure

Table 7 - Shaft-seals purge system data

2.8 Connections

Pump inlet	ISO100
Pump outlet	ISO63
Recommended pump inlet seal	Fluoroelastomer Co-Seal or fluoroelastomer trapped 'O' ring
Recommended pump outlet seal	Fluoroelastomer trapped 'O' ring
Shaft-seals purge connection	Suitable for $^1/_4$ inch outside diameter rigid tube
Cooling-water connections	Suitable for $^1/_2$ inch outside diameter rigid tube

Table 8 - Connections data

2.9 Noise data

	GV250	**GV400**
Typical continuous A-weighted sound pressure level		
50 Hz electrical supply	79 dB(A)	82 dB(A)
60 Hz electrical supply	82 dB(A)	82 dB(A)

Table 9 - Noise data

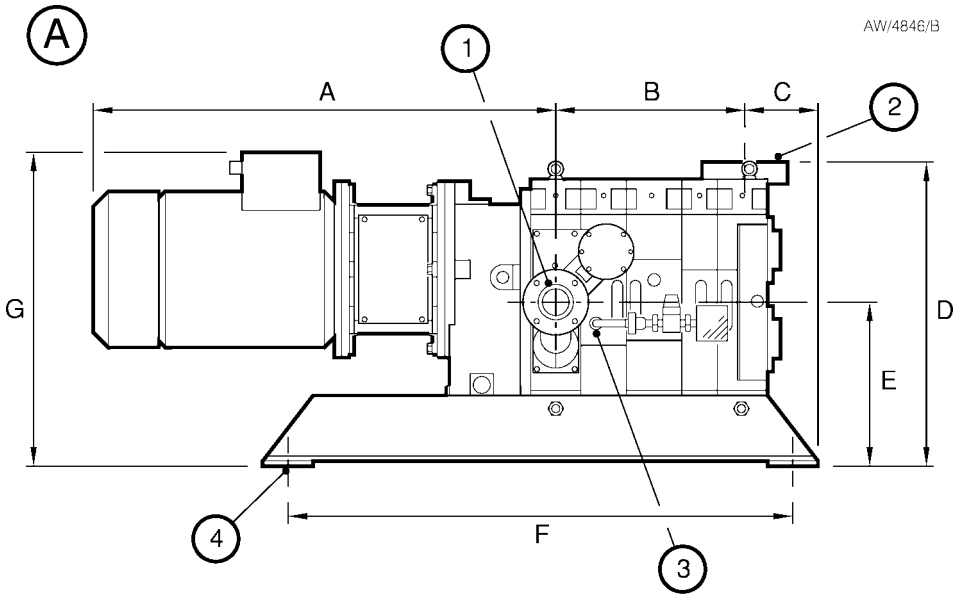

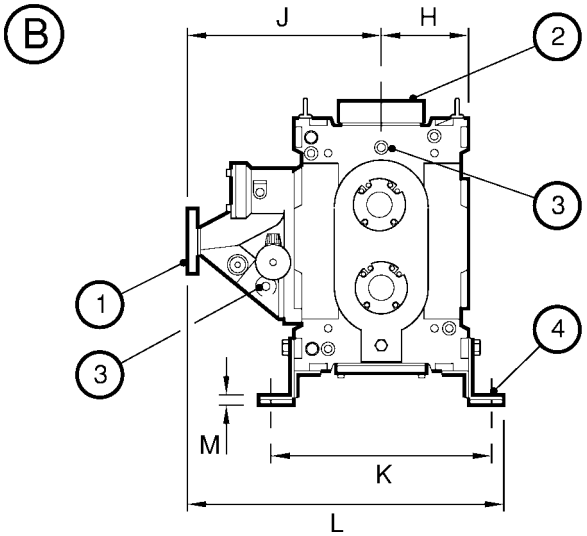

A Side view
B Front view

1. Outlet
2. Inlet

3. Port tappings: $^{1}/_{2}$ inch BSP
4. Fixing holes: Ø22 mm (0.9 inch)

	A	B	C	D	E	F	G	H	J	K	L	M
380/400/415 V, 50 Hz pump dimensions (mm)												
GV250	911	366	148	580	315	1000	640	180	377	460	632	13
GV400	955	414	148	580	315	1000	640	180	377	460	632	13
230/460 V, 60 Hz pump dimensions (inches)												
GV250	37.59	14.41	5.83	22.83	12.4	34.37	26.22	7.09	14.84	18.11	24.88	0.52
GV400	39.96	15.91	5.83	22.83	12.4	39.37	26.22	7.09	14.84	18.11	24.88	0.52

Figure 2 - Pump dimensions

3 INSTALLATION

3.1 Safety

WARNING

Obey the safety instructions listed below and take note of appropriate precautions. If you do not, you can cause injury to people and damage to equipment.

- A suitably trained and supervised technician must install the pump.
- Ensure that the installation technician is familiar with the safety procedures which relate to the products pumped.
- Wear the appropriate safety-clothing when you come into contact with contaminated components. Dismantle and clean contaminated components inside a fume-cupboard.
- Vent and purge the process system before you start installation work.
- Check that all of the required components are available and of the correct type before you start installation work.
- Disconnect the other components in the process system from the electrical supply so that they cannot be operated accidentally.
- Do not allow debris to get into the pump during installation.
- Do not reuse 'O' rings if they are damaged.
- Safely route any electrical supply cables so that they cannot accidentally trip people.

3.2 System design

WARNING

Ensure that your system can provide adequate gas-ballast and/or inlet purge to dilute toxic, flammable or explosive gases to safe limits. If you do not, there will be a risk of emission of hazardous gases.

WARNING

When the pump is switched off, gas will flow in reverse direction through the pump and there will be a rapid pressure rise in the inlet pipeline and your process system. If this will cause a dangerous situation (or if it will adversely affect your process), you must incorporate suitable devices (such as a fast-acting inlet isolation-valve or an outlet check-valve) in your system pipelines.

WARNING

Incorporate safety devices to prevent operation of the pump when the exhaust pipeline is restricted or blocked. If you do not, the exhaust pipeline may become over-pressurised and may burst.

When you design your system, take note of the following:

- You must be able to isolate the pump from the atmosphere and from your process system if you have pumped or produced dangerous chemicals
- On very dusty applications, incorporate an inlet filter in the inlet pipeline, to minimise the ingress of dust into the pump
- To get the best pumping speed, ensure that the pipeline which connects the process system to the pump is as short as possible and has an internal diameter not less than the pump-inlet.

(Continued on page 10)

- Your exhaust pipeline system must be designed so that the pressure in the pipeline during pump operation is less than 1.15 bar absolute (1.15 x 10^5 Pa, 862 torr). If the pressure in the pipeline is higher than this pressure, the pump will operate at a high temperature and may trip because of excessive electrical current consumption.
- Ensure that debris (such as weld slag) cannot get into the pump during operation.

If necessary, contact BOC Edwards or your supplier for advice on inlet isolation-valves, outlet check-valves or other components suitable for your application and system design.

3.3 Unpack and inspect

WARNING

Use suitable lifting equipment to move the pump. If you do not, you can injure yourself or damage the pump. Refer to Section 2.3 for the mass of the pump.

1. Use a fork-lift truck or a pallet truck to place the pallet in a convenient position.
2. Remove the cardboard sleeve which covers the pump, then remove the protective foil bag from around the pump.
3. Inspect the equipment. If the pump or any of the other items is damaged, notify your supplier and the carrier in writing within three days; state the Item Number of the pump together with your order number and your supplier's invoice number. Retain all packing materials for inspection. Do not use the pump if it is damaged.
4. Check that you have received the items listed in Table 10. If any of these items is missing, notify your supplier in writing within three days.
5. If the pump is not to be used immediately, replace the packing materials. Store the pump in suitable conditions as described in Section 6.1.

3.4 Locate the pump

WARNING

Use suitable lifting equipment to move the pump. If you do not, you can injure yourself or damage the pump. Refer to Section 2.3 for the mass of the pump.

Notes: If you will operate the pump in an environment with an ambient temperature of 0 °C (32 °F) or lower, contact your supplier or BOC Edwards for advice.

Ensure that the cooling-air flow around the pump-motor is not restricted.

1. Refer to Figure 1. Remove from the fixing-holes (8) the four nuts and bolts which secure the pump frame (9) to the pallet .
2. Attach suitable lifting-equipment to the four lifting bolts (5) to move the pump.
3. Locate the pump on a firm, level surface. Ensure that the surface is clean and free from debris and contamination (such as oil).
4. Use suitable bolts through the four fixing-holes (8) to secure the pump in position.

Quantity	Description	Check (✓)
1	GV pump	❑
1	Fittings kit	❑

Table 10 - Checklist of items

3.5 Check the gearbox oil-level

Refer to Figure 1. The pump is supplied filled with oil. Before you operate the pump, check that the gearbox oil-level is correct: the oil-level must be between the MIN and MAX marks on the bezel of the oil-level sight-glass (14): see detail C.

If necessary, pour more oil into the gearbox: refer to Section 5.3.

3.6 Electrical connections

3.6.1 Introduction

Make the electrical connections to the pump as described in the following sections. Figure 3 shows a schematic diagram of the recommended electrical circuit for correct operation and shut-down of the pump (and closure of an optional pump-inlet isolation-valve) when the shut-down thermal snap-switch opens.

We recommend that you connect the electrical supply to the pump through a suitable current monitor, and that you configure the high current setting on the current monitor to switch off the pump-motor at a suitable overload current.

This overload current must not exceed the maximum current rating shown on the rating plate on the pump-motor.

Connect your electrical supply to the pump-motor through a suitable contactor. The contactor must incorporate a motor protection circuit-breaker which meets the full load current ratings specified in Table 4.

Refer to Figure 1. Note that there are earth (ground) points in the pump-motor terminal-box (17) and in the thermal snap-switch box (4).

3.6.2 Connect the electrical supply to the pump: 380/400/415 V, 50 Hz supplies

WARNING

Ensure that the electrical installation of the pump conforms with your local and national safety requirements. It must be connected to a suitably fused and protected electrical supply and a suitable earth (ground) point.

CAUTION

Ensure that the motor is correctly configured for your electrical supply voltage and frequency. If you do not, you can damage the motor.

Connect the electrical supply from the contactor to the pump-motor as described below.

1. Remove the cover from the pump-motor terminal-box (Figure 1, item 16).
2. Remove the plug from one of the electrical supply cable entry holes on the terminal-box.
3. Fit a suitable cable-gland and nut to the entry hole, then pass the supply cable through the cable-gland and tighten the gland. The cable-gland you use must be rated to provide seal protection of IP66 (in IEC 529) or better to the terminal-box .
4. Refer to Figure 4 (page 13). Ensure that the links (1) are correctly configured on terminals U1 and W2, V1 and U2, and W1 and V2.
5. Connect the phase conductors (L1, L2, L3) of the supply cable (4) to terminals U1, V1 and W1, as shown in Figure 4.
6. Connect the earth (ground) wire to the earth (ground) terminal (3).
7. Tighten the cable-gland nut strain-relief screws and refit the terminal-box cover.

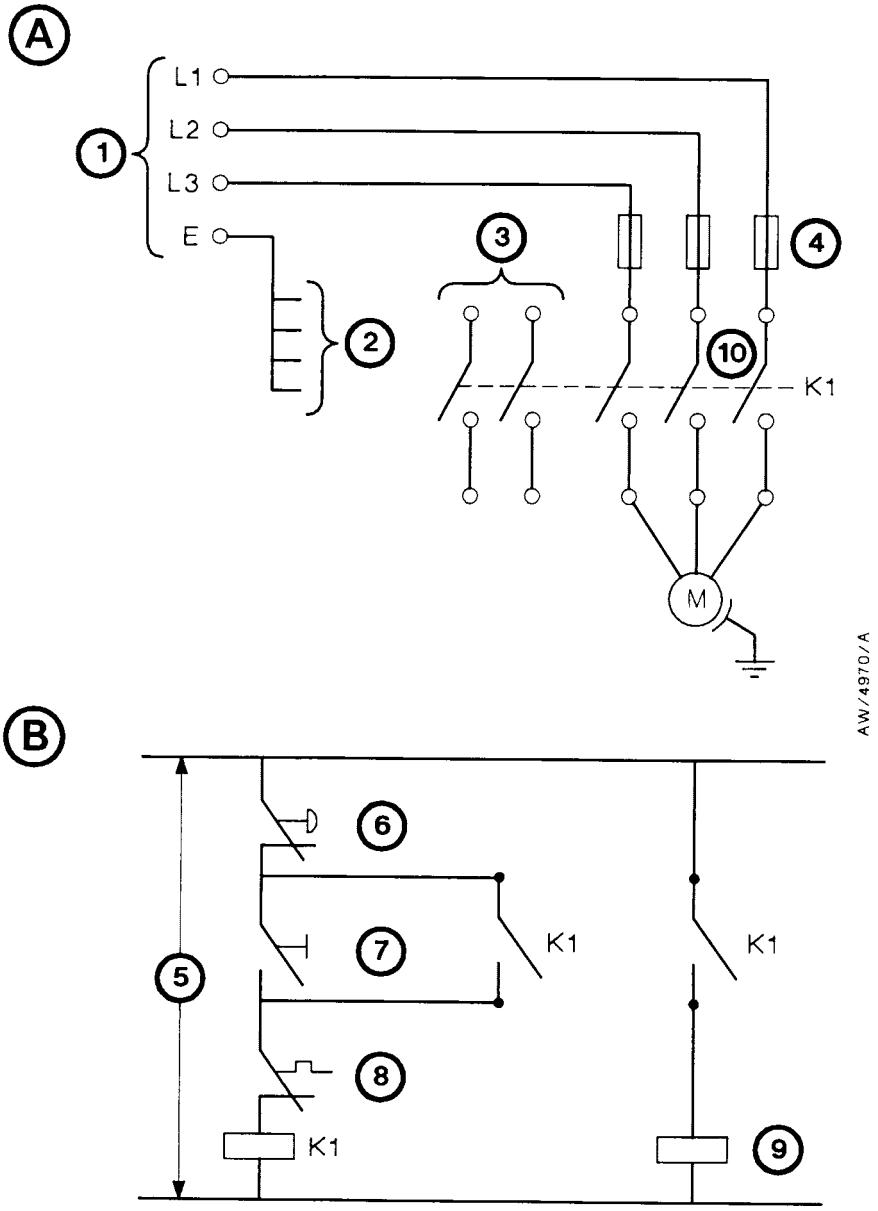

1. To your electrical supply
2. Earth (ground) points
3. Auxiliary contacts (2 off, normally closed)
4. Fuse or circuit breaker
5. Control voltage
6. Stop control
7. Start control
8. Shut-down thermal snap-switch
9. Inlet-valve control solenoid (optional)
10. Contactor

A Pump-motor connections
B Control circuit

Earth (ground) points	
Location	**Size**
Thermal snap-switch box	M4 tapped hole
Pump-motor	-

Figure 3 - Schematic diagram of the recommended electrical connections

3.6.3 Connect the electrical supply to the pump: 230/460 V, 60 Hz supplies

WARNING

Ensure that the electrical installation of the pump conforms with your local and national safety requirements. It must be connected to a suitably fused and protected electrical supply and a suitable earth (ground) point.

CAUTION

Ensure that the motor is correctly configured for your electrical supply voltage and frequency. If you do not, you can damage the motor.

Note: You must make the wiring connections to the pump-motor in accordance with the US National Electrical Code and with approved local and site practices.

Connect the electrical supply from the contactor to the pump-motor as described below.

Refer to Figure 5. Note that the 230/460 V 60 Hz pumps may be supplied with the motor wires (3) fitted to a terminal block (4), or with the terminal wires (3) unterminated.

If your pump is supplied with the motor wires unterminated, use a suitable method to link the motor wires and to connect the phase wires of your electrical supply cable; we recommend that you fit a terminal block, as shown in Figure 5. The following procedure assumes that you have fitted a terminal block to the motor wires.

1. Remove the cover from the pump-motor terminal-box (Figure 1, item 17).
2. Remove the plug from one of the electrical supply cable entry holes on the terminal-box.
3. Fit a suitable cable-gland and nut to the entry hole, then pass the supply cable through the cable-gland and tighten the cable-gland. The cable-gland you use must be rated to provide seal protection of IP66 (in IEC 529) or better to the terminal-box.
4. Refer to Figure 5 (page 14). Ensure that the links (6) are correctly configured for your electrical supply voltage; note that the links required are shown in the table on Figure 5:
   - If you have a 230 V electrical supply, configure the links as shown in detail A.
   - If you have a 460 V electrical supply, configure the links as shown in detail B.

(Continued on page 15)

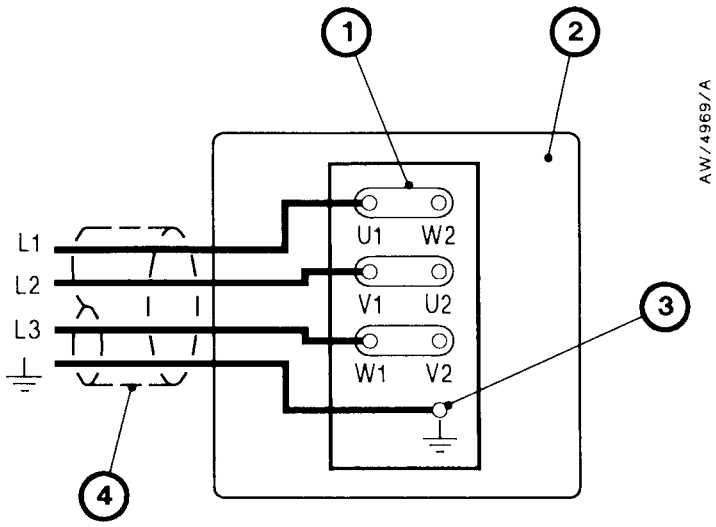

1. Links
2. Terminal-box
3. Earth (ground) terminal
4. Electrical supply cable

Figure 4 - Electrical connections: 380/400/415 V, 50 Hz electrical supplies

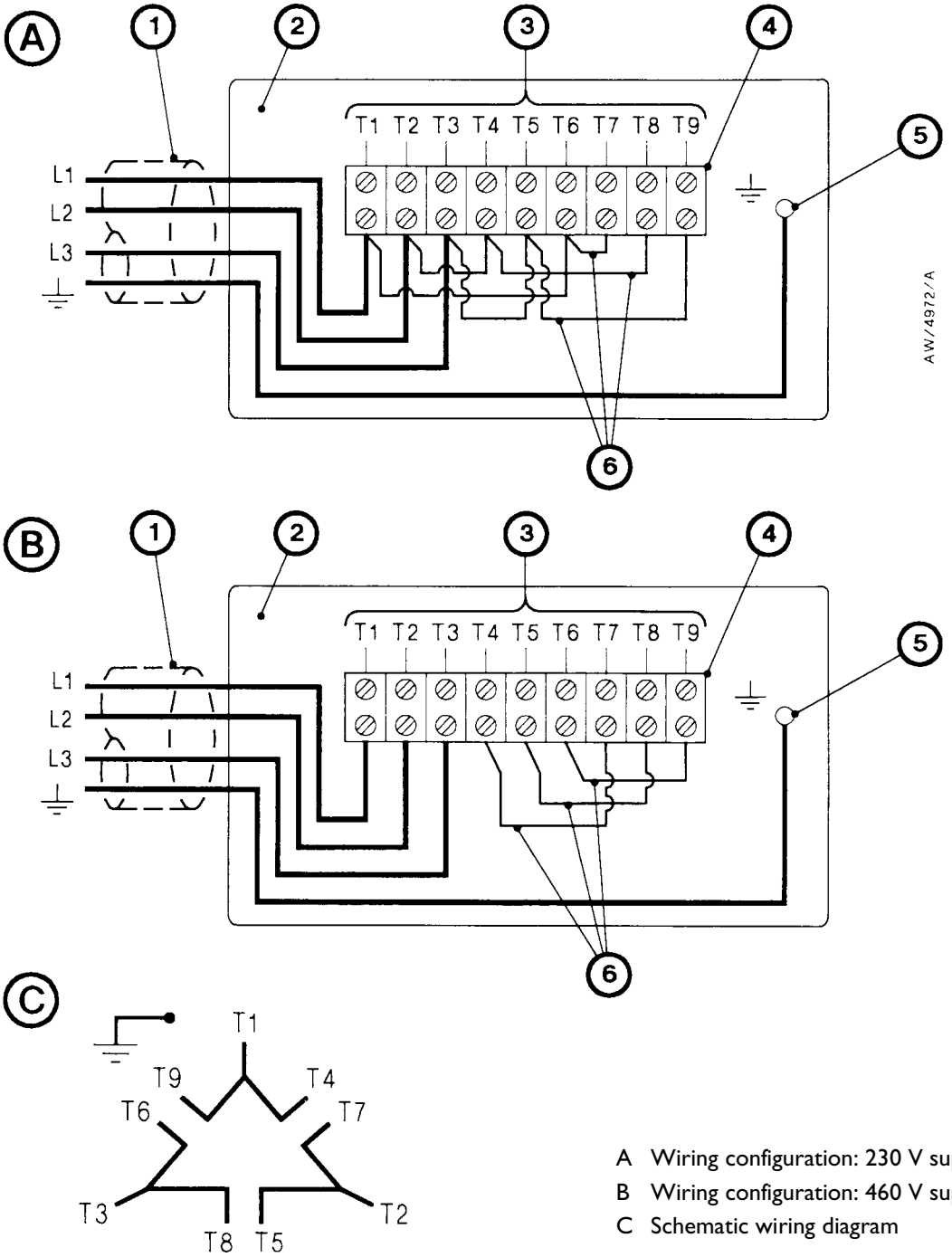

A Wiring configuration: 230 V supply
B Wiring configuration: 460 V supply
C Schematic wiring diagram

1. Electrical supply cable
2. Terminal-box
3. Motor wires
4. Terminal-block
5. Earth (ground) terminal
6. Links

Electrical supply	Links
230 V (detail A)	T1-T6-T7, T2-T4-T8, T3-T5-T9
460 V (detail B)	T4-T7, T5-T8, T6-T9

Figure 5 - Electrical connections: 230/460 V, 60 Hz electrical supplies

5. Connect the phase conductors (L1, L2, L3) of the supply cable (1) to terminals T1, T2 and T3.
6. Connect the earth (ground) wire to the earth (ground) terminal (5).
7. Tighten the cable-gland nut strain-relief screws and refit the terminal-box cover.

3.6.4 Connect to the thermal snap-switches

WARNING

You must connect the shut-down thermal snap-switch so that the pump stops when the thermal snap-switch opens. If you do not, there may be a risk of fire or explosion.

WARNING

Incorporate a manual reset device in your control equipment. If you do not (and a fault which causes the shut-down thermal snap-switch to open is not corrected), the pump will automatically switch on again when it cools down. If you have started maintenance or fault finding on the pump, there will then be a risk of fire or explosion and injury to people.

CAUTION

Ensure that you route the thermal snap-switch cable away from hot surfaces of the pump or other equipment. If you do not, the cable may be damaged.

Connect the output of the warning thermal snap-switch to your control equipment to provide an indication that the pump is too hot.

You **must** connect the output of the shut-down thermal snap-switch to the electrical-overload control-loop of your contactor, so that the contactor will automatically switch off the pump if it is too hot: refer to Figure 3.

The thermal snap-switches will reset (that is, close again) when the pump cools down to a preset temperature (see Section 2.5). We therefore recommend that your control equipment incorporates a manual reset device so that the pump does not automatically switch on again when it cools down.

Use the following procedure to connect to the thermal snap-switches. If you connect to the thermal snap-switches as described below, the output from the thermal snap-switches will be normally closed and will open when the pump is too hot.

1. Refer to Figure 6 (page 17). Undo and remove the four screws (1) which secure the cover (2) to the thermal snap-switch box (3), then remove the cover.
2. Remove the plastic bag from inside the box, then open the bag; this bag contains the crimp connectors and insulators you will use to connect to the snap-switches.
3. Pass a suitably rated four-core cable through the cable-gland (5).
4. Fit the crimp connectors to the ends of the four wires in the cable (4), then fit the insulators around the connections.
5. Fit the crimp connectors on one pair of wires (11) to the spade terminals (10) of the shut-down thermal snap-switch (9).
6. Connect the other ends of the same pair of wires to the electrical-overload loop of your contactor.
7. Fit the crimp connectors on the remaining pair of wires (6) to the spade terminals (7) on the warning thermal snap-switch (8).
8. Connect the other ends of the same pairs of wires to the warning circuit of your control equipment.
9. Tighten the cable-gland (5) to secure the cable in position.
10. Refit the cover (2) and secure with the four screws (1).

3.7 Check the direction of rotation

WARNING

You must ensure that the direction of rotation of the pump is correct before you operate the pump. If you do not, and the pump direction of rotation is incorrect, the inlet pipeline will be pressurised and may be damaged and there will be a risk of injury to people or explosion or fire.

1. Refer to Figure 1. Undo and remove the four bolts which secure the coupling cover (15) to the coupling housing, then remove the coupling cover.
2. Refer to Figure 12. Look into the coupling housing (5) and watch the drive hub (14), switch on the pump for one or two seconds, then switch the pump off.
3. If the drive hub (14) does not rotate in the correct direction (shown by an arrow on the pump-motor: Figure 1, item 18), the direction of rotation is incorrect. If the direction of rotation is incorrect:
   - Isolate the pump from the electrical supply.
   - Reverse the electrical supply phase-wires L1 and L2 in the pump-motor terminal-box: refer to Section 3.6.
   - Repeat Steps 2 and 3 to ensure that the direction of rotation is now correct.
4. Refer to Figure 1. Refit the coupling cover (15) and secure with the four bolts. Tighten the bolts to a torque between 3 and 5 Nm (2.2 and 3.7 lbf ft).

3.8 Fit a mechanical booster pump (optional)

If you want to use a mechanical booster pump with the GV pump, fit it now. Details of the connection kits available from BOC Edwards are given in Section 7.4. Refer to the installation procedures in the instruction manual supplied with the connection kit.

3.9 Connect the cooling-water supply

Note: The following procedure assumes that you use the GV pump with direct cooling, as supplied. If you want to use indirect cooling on the GV pump, install the appropriate Indirect Cooling Kit (see Section 7.4) and connect to the cooling-water supply as described in the instruction manual supplied with the Kit.

Take note of the following when you connect the cooling-water supply and return pipelines:

- If you need to connect more than one GV pump to the water supply, you must connect them in parallel and not in series.
- We recommend that you incorporate a suitable ball-type flow indicator in your water return pipeline, to provide a visual indication of cooling-water flow through the GV pump.
- We recommend that you incorporate a suitable filter in the water supply pipeline, if the water supply contains particulates.
- To prevent damage to the pump in the event of cooling-water supply failure or a blockage in the pump, we recommend that you incorporate a suitable flow-switch in the cooling-water return pipelines; you can connect the outputs of the flow-switch to your control equipment to shut down the pump when the cooling-water flow through the pump is too low.

(Continued on page 18)

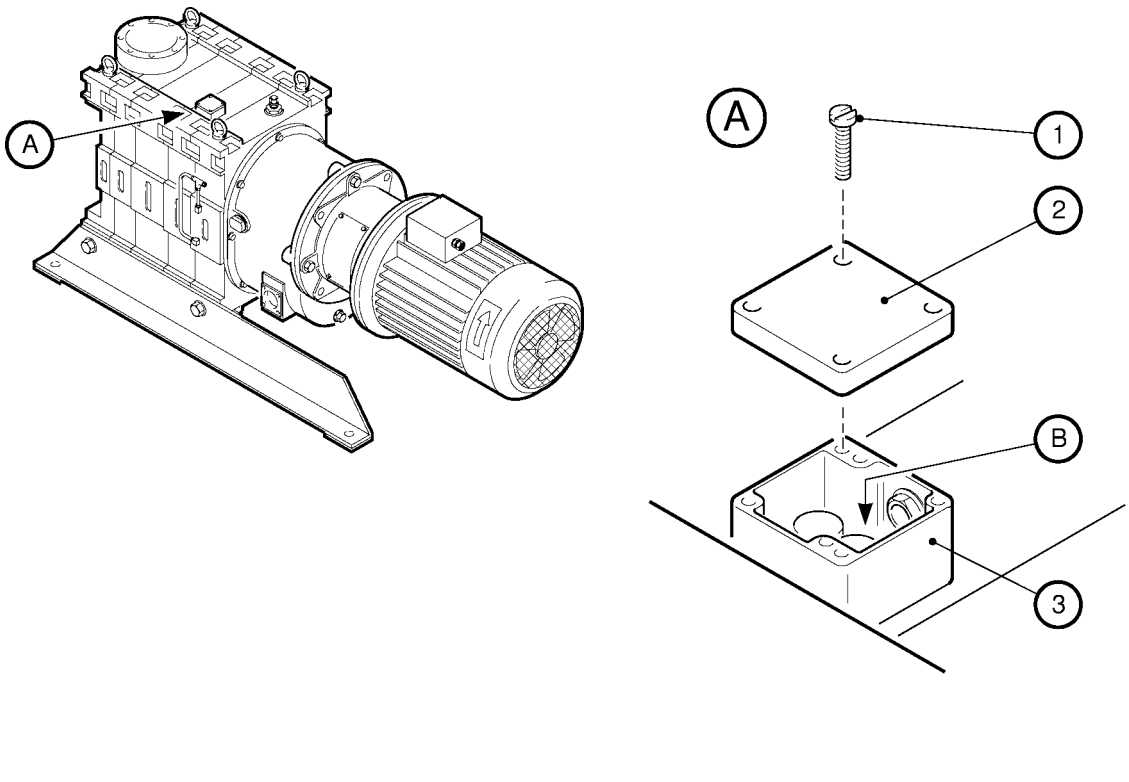

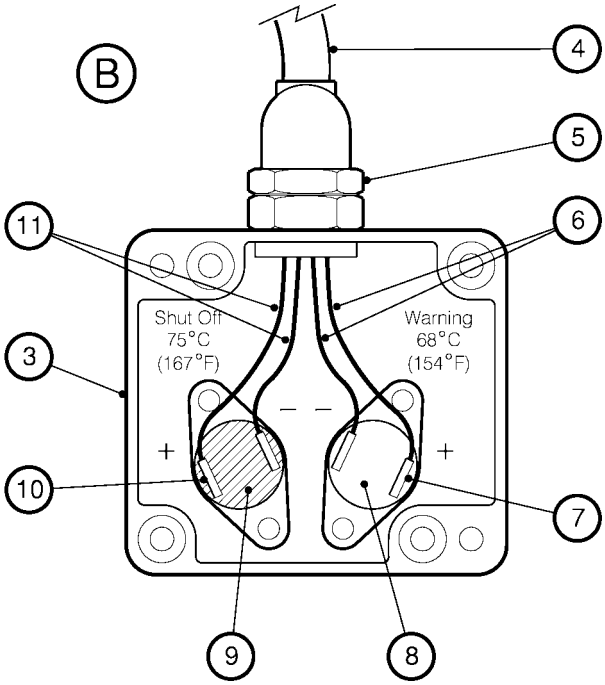

1. Bolts (4 off)
2. Cover
3. Thermal snap-switch box
4. Four-core cable
5. Cable-gland
6. Warning wires
7. Spade terminals
8. Warning thermal snap-switch
9. Shut-down thermal snap-switch
10. Spade terminals
11. Shut-down wires

Figure 6 - Connect to the thermal snap-switches

Connect the cooling-water supply as described below; you must use $^1/_2$ inch outside diameter pipes for the cooling-water supply and return pipelines.

1. Refer to Figure 1. Remove the red blanking caps from the cooling-water inlet (6) and outlet compression connections (2).
2. Remove the $^1/_2$ inch compression nuts and ferrules from the fittings kit and fit them finger-tight onto the cooling-water inlet (6) and outlet (2) connections.
3. Fit the end of your cooling-water supply pipeline to the cooling-water inlet compression fitting (6), then tighten the compression nut to secure the pipeline in place.
4. Fit the end of your cooling-water return pipeline to the cooling-water outlet compression fitting (2), then tighten the compression nut to secure the pipeline in place.

3.10 Connect the shaft-seals purge and gas-ballast gas supplies

3.10.1 Introduction

You must determine the correct shaft-seals purge and gas-ballast requirements for your application. You **must** connect nitrogen supplies to the gas systems if you will pump dangerous gases.

- If required for your application, use the procedure in Section 3.10.2 to connect a compressed air supply to the shaft-seals purge inlet. As supplied, the gas-ballast system can deliver filtered atmospheric air to the pump gas-ballast inlet, so you do not need to connect an air supply to the gas-ballast system.
- If required for your application, connect nitrogen supplies to the shaft-seals inlet and to the gas-ballast system. Use the procedures in Sections 3.10.2 and 3.10.3 to connect nitrogen supplies to the shaft-seals purge inlet and to the gas-ballast system.

3.10.2 Connect the shaft-seals purge air or nitrogen supply

WARNING

If you will pump dangerous gases, fit a suitable closed-circuit nitrogen supply to the shaft-seals purge inlet, to prevent the escape of dangerous gases from the pump.

CAUTION

Your compressed air or nitrogen supply pressure must comply with the requirements of Section 2.7. If it does not, the shaft-seals purge pipeline may become over-pressurised and the shaft-seals may fail.

Note: Your compressed air or nitrogen gas supply must be clean and dry.

We recommend that you install suitable pressure control devices, a pressure gauge, and an automatically operated isolation-valve in your compressed air or nitrogen supply configured so that:

- The shaft-seals purge air or nitrogen supply is on whenever the pump is on.
- If you connect a nitrogen supply, the nitrogen supply is off whenever the pump is off.
- Whenever the shaft-seals purge air or nitrogen supply is on, you must maintain the pressure to the shaft-seals as specified in Section 2.7.

Use the following procedure to connect your shaft-seals purge air or nitrogen supply; you must use a rigid metal (such as stainless steel) pipeline with an outside diameter of $^1/_4$ inch for your air or nitrogen supply pipeline.

1. Refer to Figure 1. Remove the red blanking cap from the shaft-seals purge inlet (22).

2. Remove the $^1/_4$ inch compression nut and ferrule from the fittings kit and fit them finger-tight onto the shaft-seals purge inlet connection (22).
3. Fit the end of your air or nitrogen supply pipeline to the shaft-seals purge inlet connection (22), then tighten the nut to secure the pipeline in place.

3.10.3 Connect a nitrogen gas-ballast supply (optional)

WARNING

If you will pump dangerous gases, fit a suitable non-venting (to atmosphere) nitrogen supply to the gas-ballast system, to prevent the escape of dangerous gases from the pump.

Notes: *Ensure that the gas-ballast nitrogen supply is clean and dry.*

Your nitrogen supply pipeline must terminate in a KF16 fitting, to enable you to connect it to the flow valve.

If required for your application, you can connect a non-venting (to atmosphere) nitrogen gas-ballast supply to the pump. You **must** connect a non-venting (to atmosphere) nitrogen gas-ballast supply to the pump if you will pump dangerous gases.

When you connect a nitrogen supply to the gas-ballast system, we recommend that you incorporate a suitable pressure gauge in the nitrogen supply pipeline.

Use the following procedure to connect a nitrogen supply to the gas-ballast system:

1. Refer to Figure 7. Undo and remove the clamp (4) and the NW16 trapped 'O' ring (3) and remove the air filter (2).
2. Use the clamp (4) and trapped 'O' ring (3) to connect your nitrogen supply pipeline to the gas-ballast flow valve (5).

3.11 Connect the pump-inlet

When you connect the pump to the process system:

- Support process pipelines to stop the transmission of stress to pipeline joints.
- Use a flexible connection in the pipeline from the process system to the pump to reduce vibration and stress in the system pipelines.

Use the following procedure to connect the inlet of the GV pump to your process system. This procedure assumes that a mechanical booster pump has not been fitted. If a mechanical booster pump has been fitted, use the instructions given in the appropriate instruction manual supplied with the mechanical booster pump.

1. Refer to Figure 1. Undo and remove the eight M8 x 35 hex-head bolts which secure the blanking-plate to the pump-inlet (6) and remove the blanking-plate. Retain the bolts.
2. Use the combined trapped 'O' ring and mesh filter supplied to connect the pump-inlet (6) to your vacuum system; secure with the bolts retained in Step 1.

Note: *If required, you can adapt the blanking-plate removed in Step 1 above to fit your system pipelines: drill a suitable size hole in the centre of the blanking-plate, then weld the blanking-plate to your pipeline.*

3.12 Connect the pump outlet

WARNING

Connect the pump outlet to a suitable treatment plant to prevent the discharge of dangerous gases and vapours to the surrounding atmosphere.

CAUTION

Install an outlet catchpot to prevent the drainage of condensate back into the pump. If you do not, condensate which drains back into the pump may damage it or cause it to seize.

Incorporate flexible bellows in the exhaust pipeline to reduce the transmission of vibration and to prevent loading of coupling-joints. If you use flexible bellows, you must ensure that you use bellows which have a maximum pressure rating which is greater than the highest pressure that can be generated in your system, and which can withstand the maximum temperatures that can be generated by your process conditions.

Use the following procedure to connect the pump-outlet to your exhaust pipeline:

1. Refer to Figure 1. Undo and remove the four M8 x 50 hex-head bolts, nuts and washers which secure the blanking-plate to the pump-outlet (12) and remove the blanking-plate. Retain the bolts, nuts and washers.
2. Use the trapped 'O' ring supplied to connect the pump-outlet (12) to your exhaust pipeline; secure with the bolts, nuts and washers retained in Step 1.

Note: If required, you can adapt the blanking-plate removed in Step 1 above to fit your exhaust pipeline: drill a suitable size hole in the centre of the blanking-plate, then weld the blanking-plate to your pipeline.

3.13 Leak test the system

WARNING

Leak-test the system after installation and seal any leaks found to prevent the leakage of dangerous substances out of the system and leakage of air into the system.

Leak-test the system after installation and seal any leaks found. Substances which leak from the system may be dangerous to people and there may be a danger of explosion if air leaks into the system.

When supplied, the leak rate of the pump is tested to be less than 1×10^{-3} mbar l s^{-1} (1×10^{-1} Pa l s^{-1}, 2.1×10^{-6} atm ft^3 min^{-1}). The required leak rate for your system will depend on your safety and process requirements.

3.14 Commission the pump

Note: To check the operating temperature of the pump, measure the temperature of the pump at the point shown in Figure 1, *item 3.*

1. Isolate the pump from your process system.
2. Ensure that the gas-ballast flow valve (Figure 1, item 10) is closed.
3. Turn on the cooling-water supply, the shaft-seals purge air or nitrogen supply, the gas-ballast nitrogen supply (if fitted) and your exhaust-extraction system. Ensure that the pressures and flow rates are as specified in Section 2.
4. Check that there are no leaks in the water, air, nitrogen (if fitted) and exhaust-extraction system connections. Seal any leaks found.
5. Switch on the pump.
6. Check that the pressure shown on your shaft-seals purge air or nitrogen pressure gauge is as specified in Section 2.7. If necessary, adjust the pressure of the air or nitrogen supply.

(Continued on page 22)

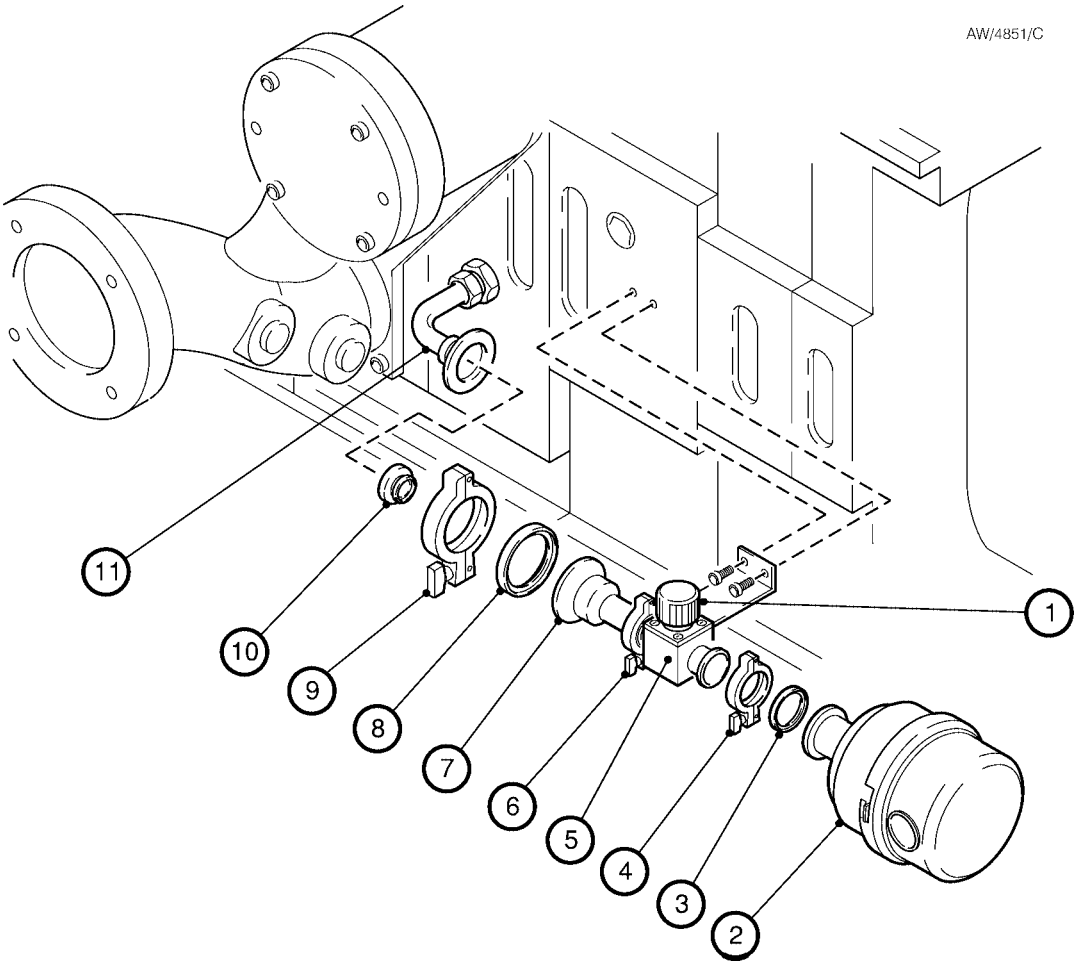

1. Gas-ballast flow valve control
2. Air filter
3. Co-Seal
4. Clamp
5. Gas-ballast flow valve
6. Clamp and Co-Seal
7. Adaptor: 16 to 25 mm
8. Co-Seal
9. Clamp
10. Flap valve
11. Elbow

Figure 7 - Exploded view of the gas-ballast assembly

7. Leave the pump to operate for approximately 30 minutes to allow the pump operating temperature to stabilise.
8. Check that the pump operating temperature is between 30 and 45 °C (86 and 113 °F).
9. Turn off the pump, the cooling-water supply, the shaft-seals air or nitrogen purge supply and the gas-ballast nitrogen supply (if fitted).

4 OPERATION

WARNING

Take all necessary safety precautions when you pump toxic, flammable or explosive gases. If you do not, there will be a danger of injury or death to people.

WARNING

During operation, some parts of the pump become hot; these areas are identified by 'hot surface' labels (see Section 1.1). Do not touch these areas of the pump, and avoid accidental contact between these areas of the pump and electrical cables and wires, and so forth.

The procedures in the following sections assume that you have a pump inlet-isolation valve fitted to your pump.

4.1 Start the pump

WARNING

Do not operate the pump with a coupling cover removed. If you do, there will be a danger of injury or death from the rotating mechanisms.

WARNING

Do not operate the pump with the pump-inlet or pump-outlet open to atmosphere. If you do, there will be a danger of injury or death from the rotating mechanisms, from the exposure to vacuum, or from hot exhaust gases.

Use the procedure below to start the pump.

1. Check the gearbox oil-level in the sight-glass on the side of the pump: refer to Section 3.5.
2. Turn on your cooling-water supply, shaft-seals purge air or nitrogen supply, gas-ballast nitrogen supply (if fitted) and exhaust-extraction system (if fitted).
3. Switch on the pump.
4. Continue at Section 4.2 to allow the pump to warm up.

4.2 Allow the pump to warm up

CAUTION

Allow the pump to warm up and use full gas-ballast and inlet purge (if fitted) before you pump condensable vapours. If you do not, the vapours may condense in the pump and corrode or damage the pump.

Leave the pump to operate (with the inlet isolation-valve closed) to allow the pump to warm up to its operating temperature:

- Without inlet purge, warm-up takes approximately 30 to 45 minutes, depending on the ambient temperature.
- With an inlet purge pressure of 50 to 250 mbar (5×10^3 to 2.5×10^4 Pa, 37.5 to 188 torr), warm-up time can be reduced to as little as 10 minutes.

When the pump has warmed up to its operating temperature, you can start process pumping. In the first 30 seconds of pumpdown, open the inlet isolation-valve slowly if there is liquid in the inlet pipeline, in order to minimize the ingress of liquid (entrained in the process gas stream) into the pump.

4.3 Check the purge pressures and flows

WARNING

Ensure that you do not touch the pump-body when you adjust the gas-ballast flow valve. During operation, parts of the pump can become hot.

Do the following checks immediately after pump start and regularly during pump operation:

1. Check that the pressure of your shaft-seals purge air or nitrogen supply is correct and adjust if necessary (refer to Section 2.7).
2. If fitted, check that the pressure of your gas-ballast nitrogen supply is correct and adjust if necessary.
3. If necessary, open the gas-ballast flow valve (Figure 1, item 10) to achieve the required gas-ballast flow into the pump.

4.4 Shut down the pump

CAUTION

Purge the pump before you shut it down. If you do not, process vapours may condense in the pump and corrode or damage it.

Note: If the pump will be shut down for a long time in an environment where the temperature is close to freezing, we recommend that you drain the cooling-water from the pump to prevent damage to the pump: refer to Section 6.1.

1. Isolate the pump-inlet from the process gases.
2. Refer to Figure 1. Purge the pump of contaminants: operate the pump with full gas-ballast (that is, with the gas-ballast flow valve (10) open) for at least 15 minutes. Alternatively, use one of the following methods:
   - Operate the pump for at least 45 minutes.
   - Operate the pump at or close to atmospheric pressure for at least 15 minutes; this is the recommended method for dusty processes.
   - Operate the pump with full inlet purge (if fitted) for at least 15 minutes.
3. Close the gas-ballast flow valve (10), or switch off inlet purge (if fitted).
4. Switch off the pump.
5. When the pump has cooled down, turn off the cooling-water supply.
6. Switch off the shaft-seals purge nitrogen supply (if fitted).

5 MAINTENANCE

5.1 Safety information

WARNING

Obey the safety instructions given below and take note of appropriate precautions. If you do not, you can cause injury to people and damage to equipment.

- A suitably trained and supervised technician must maintain the pump.
- Ensure that the maintenance technician is familiar with the safety procedures which relate to the synthetic oils and greases used and the products pumped.
- Wear the appropriate safety-clothing when you come into contact with contaminated components, grease and pump oil. Dismantle and clean contaminated components inside a fume-cupboard.
- Use suitable lifting equipment and wear safety shoes when you replace the pump-motor or the pump module.
- Allow the pump to cool to a safe temperature before you start maintenance work.
- Isolate the pump and other components in the process system from the electrical supply so that they can not be operated accidentally.
- Recheck the pump rotation direction if the electrical supply has been disconnected.
- Do not reuse 'O' rings or gaskets if they are damaged.
- Protect sealing-faces from damage.
- Leak-test the system after installation work is complete and seal any leaks found to prevent leakage of dangerous substances out of the system and leakage of air into the system: refer to Section 3.13.
- Do not touch or inhale the thermal breakdown products of fluorinated materials which may be present if the pump has overheated to 260 °C (500 °F) and above. These breakdown products are very dangerous. The pump may have overheated if it was misused, if it malfunctioned, or if it was in a fire. BOC Edwards Material Safety Data Sheets for the fluorinated materials used in the pump are available on request: contact your supplier or BOC Edwards.

5.2 Maintenance plan

The plan in Table 11 details the maintenance operations we recommend to maintain the pump in normal operation. Instructions for each operation are given in the section shown.

In practice, the frequency of maintenance is dependent on your process:

- In clean processes, you may be able to decrease the frequency of maintenance operations.
- In harsh processes you may have to increase the frequency of maintenance operations.

Adjust the maintenance plan according to your experience.

Use BOC Edwards maintenance and service kits (refer to Section 7.3). These contain all of the necessary seals, grease and other components necessary to complete maintenance successfully.

Operation	Frequency	Refer to Section
Check the gearbox oil level and fill the gearbox with oil (if necessary)	Weekly	5.3
Inspect the gas-ballast system	Monthly	5.4
Inspect the pipelines and connections	3 Monthly	5.5
Inspect the interstage relief valve and replace the hinge bushes, flap and 'O' ring (if necessary)	Yearly or when necessary	5.6
Change the gearbox oil and clean the oil-level sight-glass * §	When you relubricate the high vacuum bearings or when contaminated ‡, whichever occurs first	5.7
Relubricate the high vacuum bearings *	When necessary Ø	5.8
Clean the cooling-jacket *	Yearly or when necessary	5.9
Replace the interstage relief valve	When necessary	5.10
Replace the pump-motor #	When necessary	5.11
Replace the coupling insert †	Yearly	5.12
Relubricate the motor bearings	When necessary ¤	5.13
Replace the motor bearings **	When necessary	5.14
Overhaul the pump	3 Yearly	5.15

* You must have a Routine Maintenance Kit to do these maintenance operations.

§ For maximum pump reliability, we recommend that you change the gearbox oil when you relubricate the high vacuum bearings: refer to Section 5.8.

‡ If the gearbox oil is contaminated (indicated by a change in colour of the oil, for example, water contamination will turn the oil a white colour), you must change the oil. You may be able to remove the contaminants from the oil by filtration.

\# You must have a new pump-motor and a Motor Fitment Kit to do this maintenance operation.

Ø The frequency of maintenance depends on the operating temperature of the pump: refer to Section 5.8.

† You will need a Motor Fitment Kit to do this maintenance operation.

¤ See Section 5.13.

** You will need a Motor Bearing Kit to replace the motor bearings.

Table 11 - Maintenance plan

5.3 Check the gearbox oil-level and fill the gearbox with oil (if necessary)

WARNING

The pressure in the gearbox will be equal to the pressure of your shaft-seals purge gas supply. Loosen the oil filler-plug and wait for two or three seconds for the pressure in the gearbox to equalise before you remove the oil filler-plug or oil drain plug. If you do not, oil may be ejected under pressure from the gearbox.

Note: If you need to pour oil into the gearbox frequently, or if there is a sudden loss of a large amount of oil, the pump may be faulty: shut down the pump and contact your supplier or BOC Edwards.

Figure 1 shows the locations of the two oil-level sight-glasses on the pump. Refer to Figure 10 and check that the pump gearbox oil-level is at the MAX mark on the bezel of the oil-level sight-glass (10): see Figure 1, detail C. If the oil-level is below the MAX mark:

1. Remove the oil filler-plug (12) and bonded seal (13) from the oil-filler port (1), fit a suitable funnel to the oil-filler port, then pour oil through the funnel into the pump gearbox until the oil-level is at the MAX mark on the bezel of the oil-level sight-glass (see Figure 1, detail C).
2. If you overfill the gearbox:
   - Place a suitable container under the oil drain-plug (3);
   - Unscrew and remove the drain-plug (3) and bonded seal (4) and allow oil to drain from the gearbox;
   - When the oil level reaches the MAX mark on the sight-glass (see Figure 1, detail C), refit and tighten the oil drain-plug (3) and bonded seal (4);
   - Continue at Step 1 again, to check that the oil-level is now correct.
3. Refit the oil filler-plug (12) and bonded seal (13) to the oil-filler port (1).

5.4 Inspect the gas ballast system

Use the following procedure to inspect the gas-ballast system.

Note that if you have not connected a nitrogen gas-ballast supply, the gas-ballast air filter element must be replaced every three years as part of the pump overhaul (see Section 5.15). However, you may need to replace the air filter element more frequently if you use the GV pump in an environment where there are excessive air-borne particulates; refer to Table 16 for the Item Number for a new air filter element.

1. If you have connected a nitrogen gas-ballast supply, continue at Step 6, otherwise continue at Step 2 to inspect the air filter element.
2. Refer to Figure 8. Turn the top-cap (1) clockwise (when viewed from the top-cap end of the gas-ballast air filter) to release it from the filter body (4), then remove the top-cap.
3. Inspect the filter element (3); if there are excessive deposits lodged in the air filter, continue at Step 4, otherwise continue at Step 5.
4. Remove and dispose of the used filter element (3), and fit the new filter element (3) into the filter body (4).
5. Refit the top-cap (1) to the filter body (4) and turn it anticlockwise until it clicks, to secure it to the filter body: ensure that the inlet (2) on the top-cap does not point upwards, otherwise debris, dust or liquids may enter the filter body.
6. Refer to Figure 8 (page 28). Inspect all of the clamps (4, 6, 9) in the gas-ballast system and check that they are secure: tighten any loose connections.

5.5 Inspect the pipelines and connections

1. Inspect all cooling-water pipelines and connections; check that they are not corroded or damaged. Replace any of the pipelines and connections that are corroded or damaged. Check that all cooling-water connections are secure. Tighten any connections that are loose.
2. Inspect all air or nitrogen supply pipelines and connections; check that they are not corroded or damaged. Replace any pipelines and connections that are corroded or damaged. Check that all air or nitrogen supply connections are secure. Tighten any connections that are loose.
3. Inspect all electrical cables; check that they are not damaged and have not overheated. Replace any cables that are damaged or have overheated. Check that all electrical connections are secure. Tighten any connections that are loose.
4. Inspect all process and exhaust pipelines; check that they are not corroded or damaged. Replace any pipelines that are corroded or damaged. Check that all process and exhaust connections are secure. Tighten any connections that are loose.

5.6 Inspect the interstage relief valve and replace the hinge bushes, valve flap and valve 'O' ring (if necessary)

If you think that the interstage relief valve does not operate correctly, use the following procedure to inspect it. Refer to Figure 9.

1. Remove the four M8 bolts (11) which secure the retainer (9) to the exhaust manifold (3).
2. Fit two of the bolts (11) into the jacking holes (10) and tighten the bolts to remove the retainer (9) from the exhaust manifold (3).
3. Remove the valve flap (7) and valve body (2) assembly from the exhaust manifold (3).
4. Inspect the valve:
   - If the retainer (9) or valve body (2) are damaged or corroded, you must replace the interstage relief valve: refer to Section 5.10.
   - If any of the valve flap (7), the hinge bushes (1) or the valve 'O' ring (6) are damaged, replace the damaged component with a new component.

(Continued on page 30)

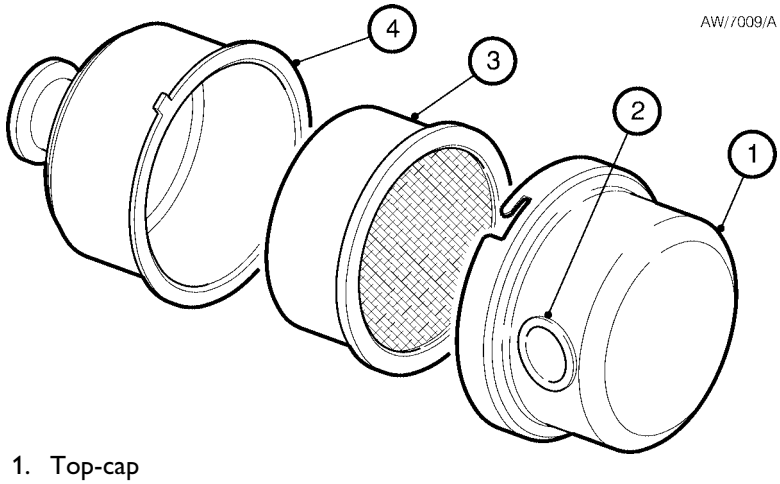

1. Top-cap
2. Inlet
3. Filter element
4. Filter body

Figure 8 - Exploded view of the gas-ballast air filter

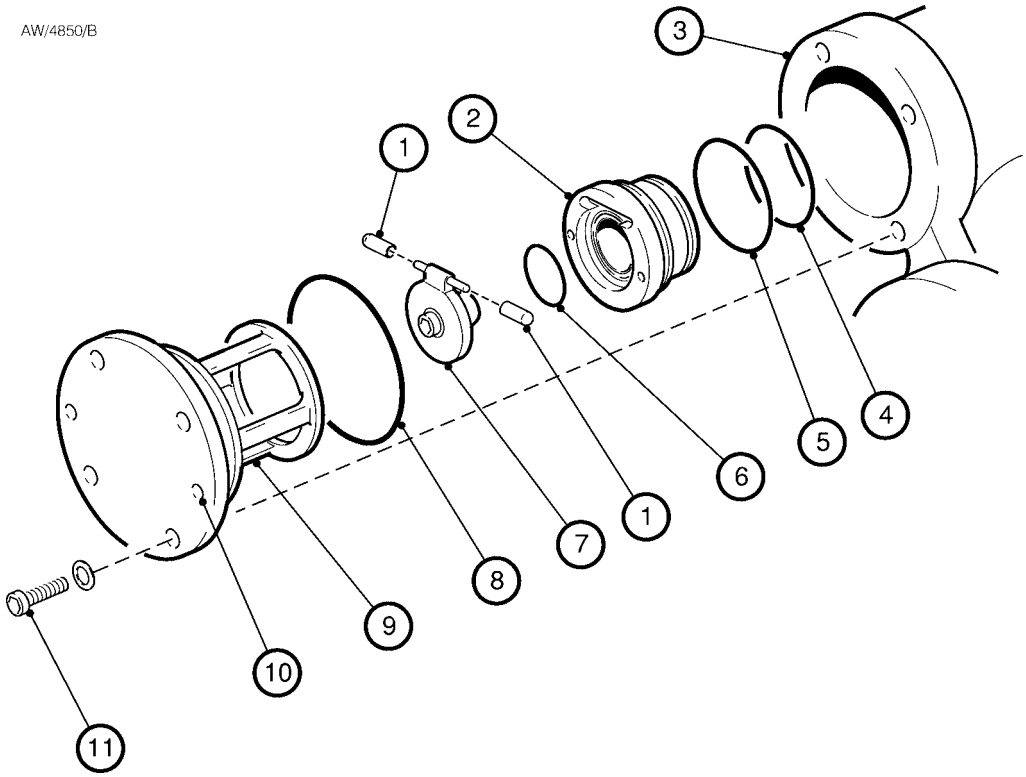

1. Hinge bush
2. Valve body
3. Exhaust manifold
4. ‘O’ ring
5. 'O' ring
6. Valve ‘O’ ring
7. Valve flap
8. 'O' ring
9. Retainer
10. Jacking hole
11. Bolt (4 off)

Figure 9 - Exploded view of the interstage relief valve

5. Clean the inside of the exhaust manifold (3) to remove any deposits; if necessary, use a suitable cleaning solution. If you use a cleaning solution, ensure that all of the solution is removed before you fit the new interstage relief valve componentts.
6. Inspect the 'O' rings (8, 5, 4) and, if necessary, fit new 'O' rings.
7. If necessary, refit the two hinge bushes (1) to the valve flap (7), then fit the valve flap to the valve body (2).
8. Refit the valve body (2) in the exhaust manifold (3).
9. Fit the retainer (9) to the exhaust manifold (3) and secure with the four bolts (11). Tighten the bolts to a torque of 10 Nm (7.4 lbf ft).

5.7 Change the gearbox oil and clean the oil-level sight-glasses

WARNING

The pressure in the gearbox will be equal to the pressure of your shaft-seals purge gas supply. Loosen the oil filler-plug and wait for two or three seconds for the pressure in the gearbox to equalise before you remove the oil filler-plug or oil drain plug. If you do not, oil may be ejected under pressure from the gearbox.

WARNING

Ensure that you do not come into contact with the used pump oil. The used oil may be hot and can cause injury.

WARNING

Changing the oil in a pump from hydrocarbon to PFPE (Fomblin) could potentially cause a safety hazard. Fomblin pumps are generally used in hazardous applications which may involve the pumping of gases with high concentrations of oxygen. If hydrocarbon oil comes into contact with gases with an oxygen concentration greater than 25%, an explosion can occur.

Therefore, if you want to convert a pump that has been used with hydrocarbon oil to use PFPE (Fomblin) oil, you cannot simply flush the pump with new PFPE oil. You must return the pump to a BOC Edwards Service Centre for overhaul and cleaning by qualified BOC service engineers. The change in oil type requires a complete strip down of the pump, and thorough cleaning of all parts, so that all traces of hydrocarbon oil are removed.

Refer to Figure 1. You must clean the oil-level sight-glasses (14) when you change the gearbox oil. Use the following procedure to clean each sight-glass.

1. Refer to Figure 10. Remove the oil filler-plug (12) and bonded seal (13).
2. Place a suitable container under the oil drain-port (5); ensure that the container has sufficient capacity for the oil in the pump (see Section 2.6).
3. Unscrew and remove the oil drain-plug (3) and the bonded seal (4) and allow the oil to drain from the gearbox. Dispose of the 'O' ring.
4. Undo and remove the four M5 screws (11) from the sight-glass bezel (10) on one of the oil-level sight-glasses.
5. Remove the bezel (10), 'O' ring (9), sight-glass (8),'O' ring (7) and compression ring (6). Dispose of the 'O' rings.

(Continued on page 32)

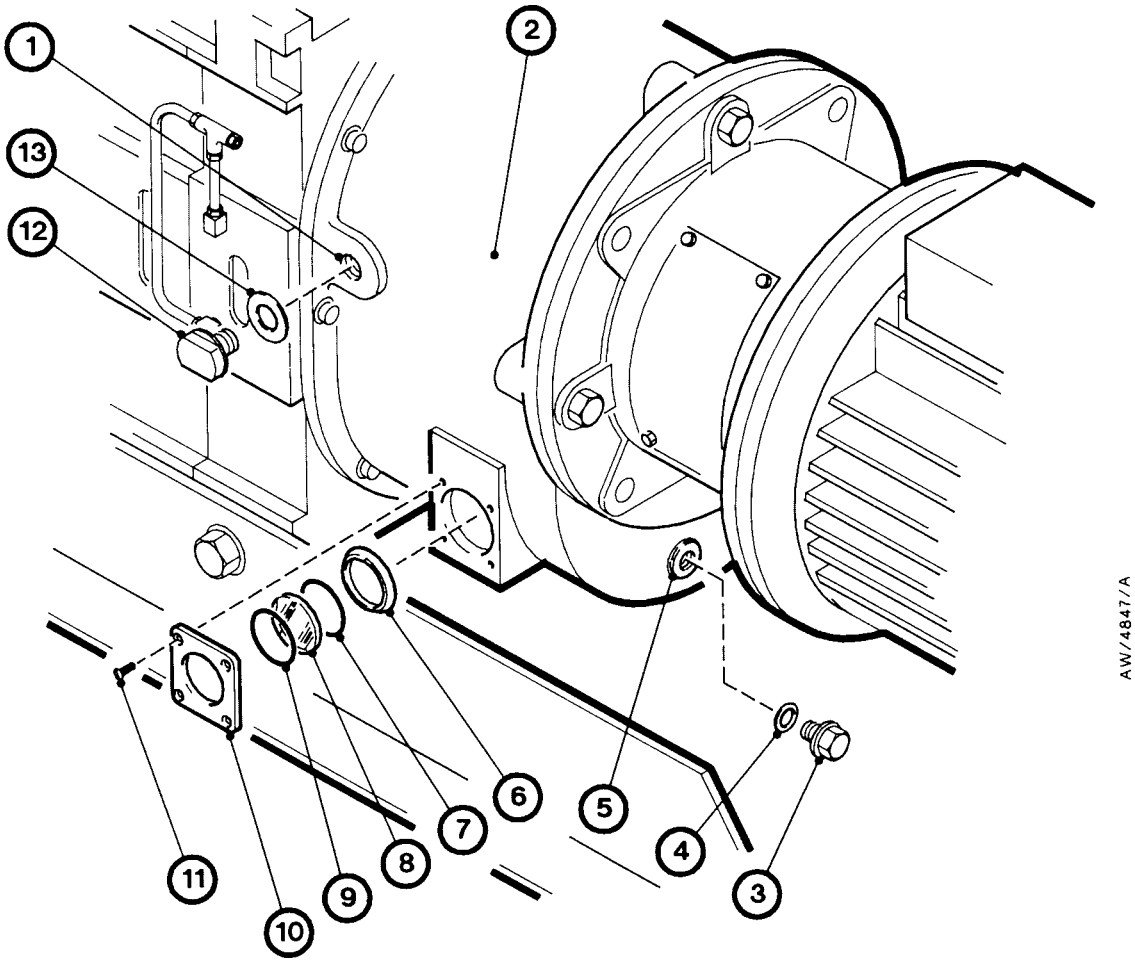

1. Oil filler-port
2. Gearbox
3. Oil drain-plug
4. Bonded seal
5. Oil drain-port
6. Compression ring
7. 'O' ring
8. Sight-glass
9. 'O' ring
10. Bezel
11. Screws (4 off)
12. Oil filler-plug
13. Bonded seal

Figure 10 - Oil-level sight-glass and oil filler and drain ports

6. Clean all of the sight-glass components and the sight-glass recess in the gearbox (2) with a soft lint-free cloth. If necessary, use a suitable cleaning solution; if you use a cleaning solution, ensure that all of the solution is removed before you reassemble the sight-glass.
7. Refit the compression ring (6) in the sight-glass recess in the gearbox (2).
8. Fit two new 'O' rings (7, 9) and the sight-glass (8), then fit the bezel (10) and secure with the four M5 screws (11).
9. Place a suitable funnel in the oil filler-port (1).
10. If the oil drained from the pump is very discoloured, flush the gearbox with new or clean oil two or three times, until the oil which drains from the gearbox is clean.
11. Wipe clean the oil drain-plug (3), then fit a new bonded seal (4) to the drain-plug.
12. Fit the oil drain-plug (3) and bonded seal (4) to the oil drain-port (5).
13. Fill the gearbox through the funnel, with the correct grade and quantity of oil. Allow the oil to drain into the gearbox and then check the level on the oil sight-glass (refer to Section 5.3).
14. Remove the funnel and refit the oil filler-plug (12) and bonded seal (13) to the oil filler-port (1).
15. Dispose of the used oil safely: refer to Section 6.2.

5.8 Relubricate the high-vacuum bearings

The frequency of relubrication of the high-vacuum bearings depends on the operating temperature of your pump; Table 12 shows the recommended frequencies. For maximum pump reliability, we recommend that you change the gearbox oil when you relubricate the high-vacuum bearings: refer to Section 5.3.

Use the following procedure to relubricate the high-vacuum bearings:

1. Refer to Figure 11. Remove the three M8 bearing cap retaining bolts (5) which secure the bearing cap (4) on the drive rotor shaft; ensure that you do not accidentally remove one or more of the bearing carrier bolts (8, see detail A), which are next to the bearing cap retaining bolts. Remove the bearing cap (4) and the bearing cap 'O' ring (3).
2. Repeat Step 1 to remove the bearing cap (6) and bearing cap 'O' ring on the driven rotor shaft.
3. Use a clean lint-free cloth to remove as much old grease as possible from the inside face of the bearing caps (4, 6) and from the top of the bearings (2). Do not use your fingers for this operation.
4. Inspect the bearings (2) for obvious signs of wear or the presence of debris. If the bearings are worn, contact your supplier or BOC Edwards for advice.

(Continued on page 34)

Pump operating temperature (measured at the point shown in Figure 1, item 3)	Recommended frequency of high-vacuum bearing relubrication
30 to 45 °C, 86 to 113 °F	Every 18 months
46 to 60 °C, 115 to 140 °F	Every 12 months
61 to 75 °C, 142 to 167 °F	Every 6 months
76 to 90 °C, 169 to 194 °F	Every 3 months

Table 12 - Recommended frequencies for high-vacuum bearing relubrication

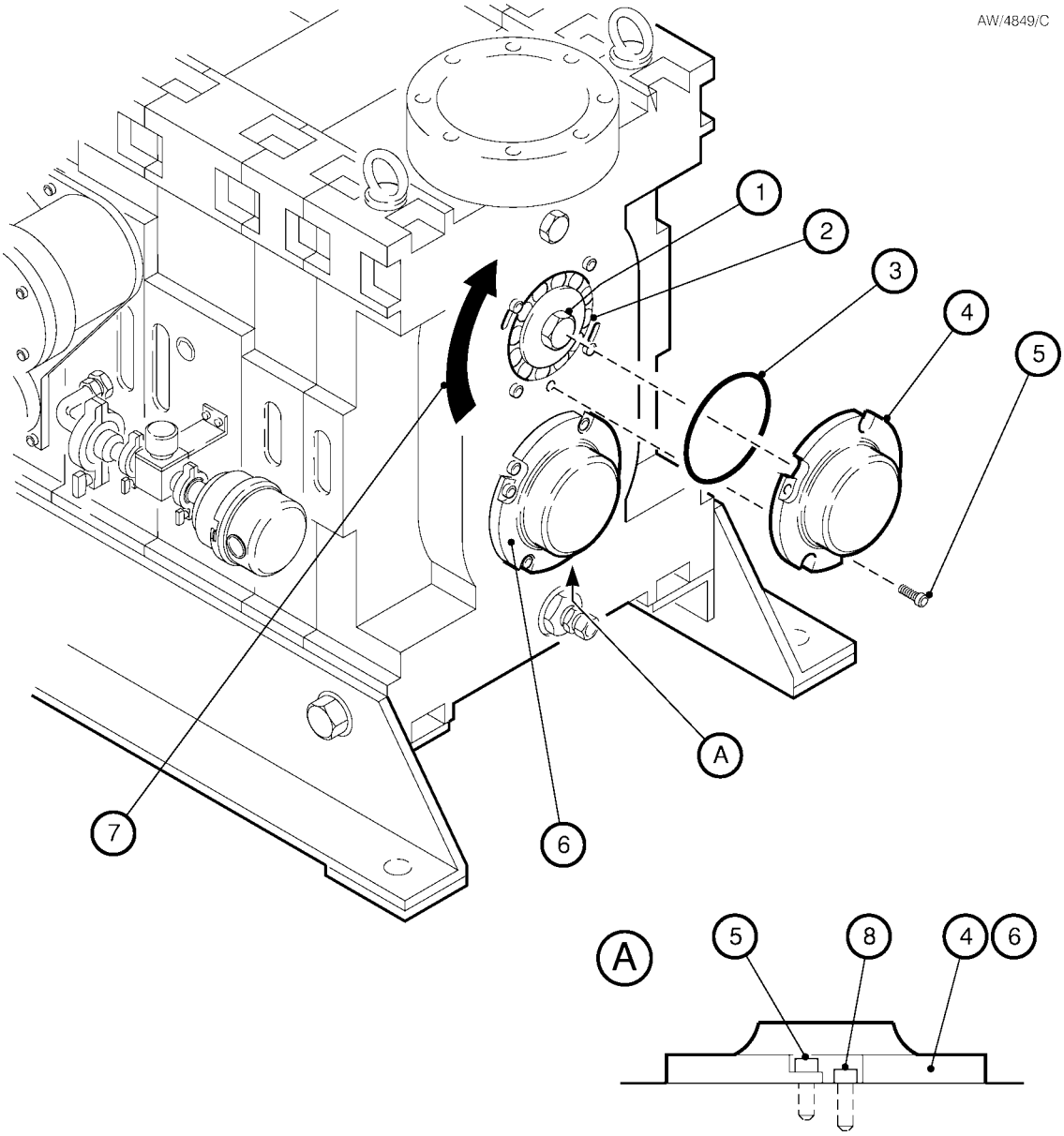

1. Drive rotor shaft
2. Bearings
3. Bearing cap 'O' ring
4. Drive shaft bearing cap
5. Bolt
6. Driven shaft bearing cap
7. Correct direction of rotation
8. Bearing carrier bolt

Figure 11 - Relubricate the high vacuum bearings

5. If the bearings are in a satisfactory condition, use a suitable syringe to force approximately 50 g (1.8 oz) of new Fomblin RT15 grease into the bearings so that a smooth layer of grease covers the case and bearings. Do not put too much grease in the bearings or the pump will run hot.
6. Use a 24 mm A/F spanner to turn the drive rotor shaft (1) in the correct direction (7) three or four complete revolutions.
7. Press any grease forced out of the bearings back into the bearings.
8. Refit the bearing cap (4) with a new bearing cap 'O' ring (3) on the drive rotor shaft. Apply a suitable thread sealant (for example, Loctite Screwlok 242 or equivalent) to each of the three bearing cap retaining bolts (5) and refit the bolts to secure the bearing cap.
9. Repeat Step 8 to refit the bearing cap (6) on the driven rotor shaft.
10. Dispose of the old grease safely: refer to Section 6.2.

5.9 Flush the cooling jacket

WARNING

If the water flow through the cooling jacket is blocked or restricted, the water in the pump may get very hot. Allow the pump to cool down before you remove the cooling-water connections. If you do not, hot water may be ejected from the pump and may cause injury.

Flush the cooling jacket every year or when you think that the cooling efficiency is reduced because of deposits or other contamination in the cooling jacket. The pressure and flow rate of the water supply that you use to flush the cooling jacket must be equal to or higher than the normal cooling-water supply. Do not exceed the pressure specified in Section 2.5.

1. Switch off your cooling-water supply.
2. Refer to Figure 1. Disconnect the cooling-water supply and return pipelines from the water inlet (7) and outlet (2) connections.
3. Fit a suitable water supply pipeline to the water outlet connection (2), and fit a suitable water return pipeline to the water inlet connection (7).
4. Turn on the water supply to flush the cooling jacket in the reverse direction, and wash out any deposits from the cooling jacket.
5. Allow the water to flow for a few minutes, switch off the water supply, then disconnect the water return pipeline.
6. Place a suitable splash tray under the cooling-water inlet connection (7), then unscrew and remove the $1^1/_4$ inch BSP water inlet fitting (that is, the large fitting to which the cooling-water inlet connection (7) is fitted) from the port in the end of the pump.
7. Use a suitable tool to remove any sediments from the port.
8. Turn on the water supply for a short time to flush any remaining deposits from the cooling-jacket.
9. Disconnect the water supply pipeline from the cooling-water outlet connection (2), then dispose of the water and deposits in the splash tray.
10. Apply a suitable thread sealant (such as Loctite 577) to the threads of the $1^1/_4$ inch BSP water inlet fitting, then refit the fitting to the port in the end of the pump.
11. Refit your pump cooling-water supply and return pipelines to the water inlet (7) and outlet (2) connections.

5.10 Replace the interstage relief valve

You must replace the interstage relief valve if it is damaged. The interstage relief valve is available as a spare: refer to Section 7.3.

1. Refer to Figure 9. Undo and remove the four M8 bolts (11) which secure the valve retainer (9) to the exhaust manifold (3).
2. Place two of the bolts in the jacking holes (10) and tighten the bolts to remove the retainer (9) from the exhaust manifold.
3. Remove the 'O' ring (8), valve flap (7), hinge bushes (1), valve body (2) and 'O' rings (5, 4) from the exhaust manifold (3).
4. Clean the inside of the exhaust manifold to remove any deposits; if necessary, use a suitable cleaning solution. If you use a cleaning solution, ensure that all of the solution is removed before you fit the new interstage relief valve.
5. Fit the new interstage relief valve to the exhaust manifold and secure with the four M8 bolts (11). Tighten the bolts to a torque of 10 Nm (7.4 lbf ft).

5.11 Replace the pump-motor

5.11.1 Remove the pump-motor

WARNING

Ensure that the pump-motor cannot fall when you remove it. The pump-motor is heavy and can cause injury to people if it falls.

Use the following procedure to remove the pump-motor. Ensure that the pump-motor is adequately supported throughout and does not fall.

The masses of the pump-motors are as shown below:

Pump/electrical supply	Motor mass
GV250: 380/400/415 V, 50 Hz	104 kg
GV250: 230/460 V, 60 Hz	286 lbs
GV400: 380/400/415 V, 50 Hz	126 kg
GV400: 230/460 V, 60 Hz	364 lbs

1. Refer to Figure 1. Remove the cover from the pump-motor terminal-box (17) and disconnect your electrical supply cable from the terminal-box.
2. Refer to Figure 12. Fit slings and suitable lifting equipment to support the pump-motor, then remove the fixing bolts (1) which secure the pump-motor (19) to the coupling housing (7).
3. Use the lifting equipment to move the pump-motor (19) away from the pump, then carefully lower the pump-motor, so that it rests on the floor in an upright orientation (that is, with the drive hub (16) at the top).
4. Undo the set screws (3) on the holding ring (17), then remove the holding ring.
5. Remove the coupling insert (15) and inspect it; if necessary, replace it.
6. Undo and remove the set screw (4) in the drive hub (16).
7. Use a suitable puller tool to remove the drive hub (16) from the motor shaft (18), then remove the key (2) from the motor shaft. Dispose of the key.
8. Dispose of the pump-motor: refer to Section 6.2.

5.11.2 Fit the new pump-motor

WARNING

Ensure that the pump-motor does not fall when you move it. The pump-motor is heavy (see Section 5.11.1) and can cause injury to people if it falls.

CAUTION

Ensure that the pump-motor flange and the bottom flange of the coupling housing are clean and free of burrs. If you do not, the pump-motor and coupling housing may be misaligned and you may damage the pump-motor, the pump or the drive coupling when you operate the pump.

1. Refer to Figure 12. Dispose of the key supplied with the new pump-motor.
2. Inspect the motor shaft (18) of the new pump-motor (19). The motor shaft must be free of burrs and dirt. If necessary, clean or refinish the motor shaft.
3. Inspect the motor shaft bore of the drive hub (16). The bore must be free of burrs and dirt. If necessary, clean or refinish the bore.
4. Fit the new key (2, supplied in the Motor Fitment Kit) into the motor shaft (18).
5. Ensure that the set screw (4) does not protrude into the bore of the drive hub (16): if necessary, loosen the set screw.
6. Fit the drive hub (16) fully on the motor shaft (18). Do not fully tighten the set screw.
7. Ensure that the coupling hub (14) is fully located on the pump shaft (9), against the shaft bearing nut (11). If necessary:
   - Loosen the set screw (5) in the coupling hub (14).
   - Move the coupling hub so that it is fully on the pump shaft (9), against the shaft bearing nut (11).
   - Apply a suitable thread sealant (such as Loctite 242 Nutlock) to the set screw (5), then fully tighten it.
8. Slide the holding ring (17) over the coupling hub (14).
9. Inspect the bottom flange of the coupling housing (7) and the flange of the pump-motor (18). The flanges must be free of burrs and dirt. If necessary, clean or refinish the flanges.
10. Use suitable lifting equipment to lift the pump-motor off the floor and move it close to the pump.
11. If necessary, fit slings around the pump-motor (18) and attach suitable lifting equipment to the slings. Use both sets of lifting equipment to turn the pump-motor so that it is horizontal, with the pump-motor terminal-box at the top, and with the drive hub (16) towards the coupling housing (7).
12. Undo and remove the four bolts (13) which secure one of the coupling covers (12) to the coupling housing (7), then remove the coupling cover.
13. Undo and remove the four bolts (13) which secure the other coupling cover (12) to the coupling housing (7), then remove the coupling cover.
14. Move the pump-motor (19) so that the motor flange locates against the flange of the coupling housing (7), and so that the bolt holes in the two flanges are aligned.
15. Use the bolts (1) to secure the pump-motor (19) to the coupling housing (7).
16. Loosen the set screw (4) on the drive hub (16), then move the drive hub along the shaft until the gear teeth on the drive hub (16) and coupling hub (14) are parallel, and the gap between the teeth on the two hubs is 2.5 ± 1 mm.

(Continued on page 38)

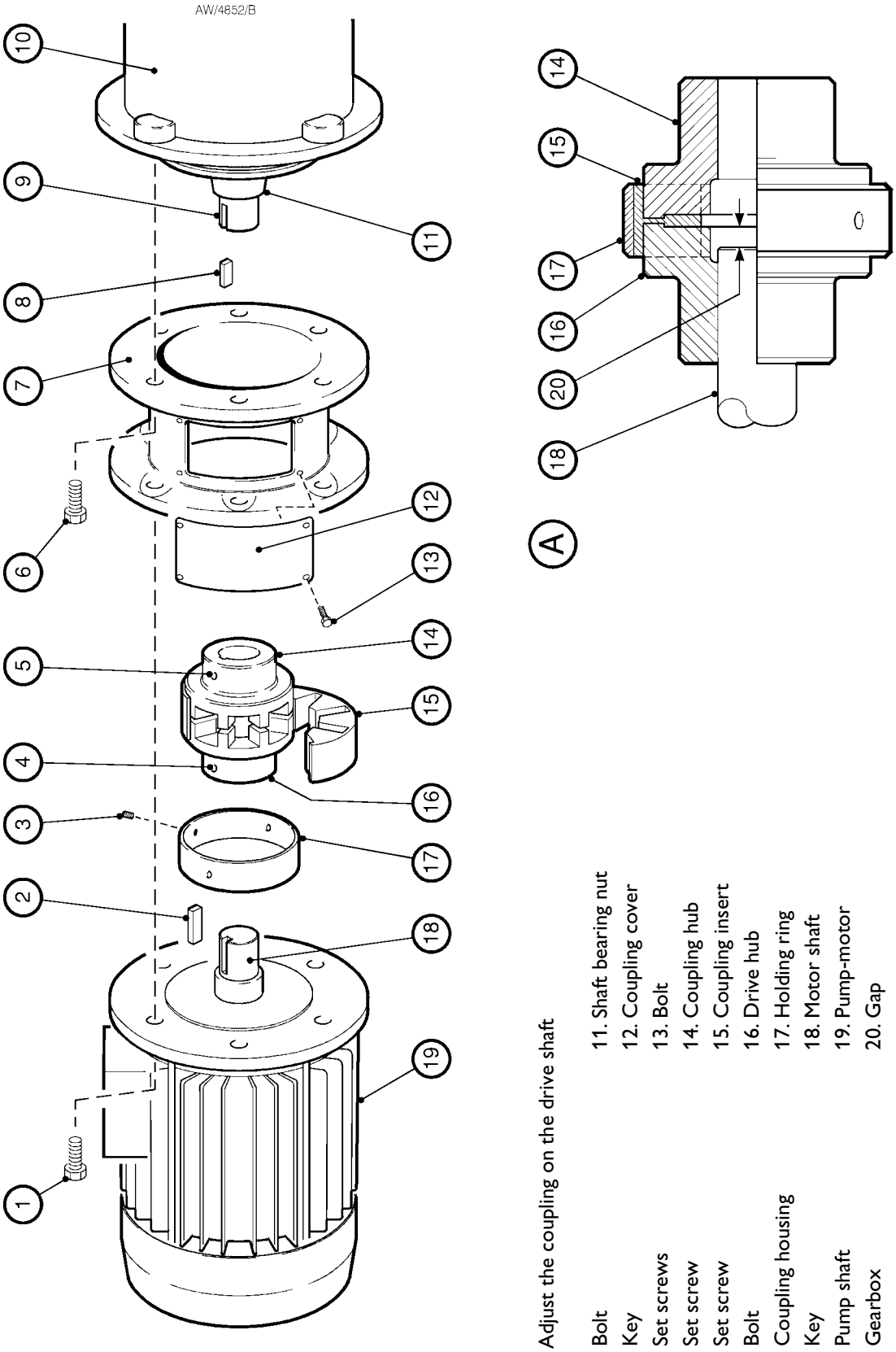

A Adjust the coupling on the drive shaft

1. Bolt
2. Key
3. Set screws
4. Set screw
5. Set screw
6. Bolt
7. Coupling housing
8. Key
9. Pump shaft
10. Gearbox
11. Shaft bearing nut
12. Coupling cover
13. Bolt
14. Coupling hub
15. Coupling insert
16. Drive hub
17. Holding ring
18. Motor shaft
19. Pump-motor
20. Gap

Figure 12 - Exploded view of the pump-motor, coupling drive and coupling housing

17. Check that the gap (detail A, item 20) is as shown below.

Pump	Gap setting
GV250, 50 Hz	-1.5 mm *
GV250, 60 Hz	-1.5 mm *
GV400, 50 Hz	7.0 mm
GV400, 60 Hz	26.0 mm

* The end of the motor shaft protrudes beyond the face of the coupling.

18. If the gap is not correct:
    - Check that the flange of the pump-motor (19) is correctly located against the flange of the coupling housing (7).
    - If the pump-motor is correctly fitted, loosen the set screw (7) on the drive hub (16) and adjust the position of the coupling hub, then tighten the set screw again. Continue at Step 17 to check that the gap is now set correctly.
19. Apply a suitable thread sealant to the set screw (4) then fully tighten it to secure the drive hub (16) to the motor shaft (18).
20. Fit the coupling insert (15) to the gaps between the teeth on the drive hub (16) and coupling hub (14).
21. Turn the holding ring (17) so that the reference line on the holding ring is aligned with the split in the coupling insert (15), then slide the holding ring over the insert.
22. Tighten the set screws (3) to secure the holding ring (17) in place.
23. Ensure that all of the fixing bolts (1) are tightened to a torque between 128 and 132 Nm (94 and 97 lbf ft).
24. Use the four bolts (13) to secure one of the coupling covers (12) to the coupling housing (7). Tighten the bolts to a torque between 3 and 5 Nm (2.2 and 3.7 lbf ft).
25. Use the four bolts (13) to secure the other coupling covers (12) to the coupling housing (7). Tighten the bolts to a torque between 3 and 5 Nm (2.2 and 3.7 lbf ft).

5.12 Replace the coupling insert

Use the following procedure to replace the coupling insert:

1. Refer to Figure 12. Undo the four bolts (13) which secure one of the coupling covers (12) to the coupling housing (7), then remove the coupling cover.
2. Undo the four bolts (13) which secure the other coupling cover (12) to the coupling housing (7), then remove the coupling cover.
3. Loosen the set screws (3) on the holding ring (17), then slide the holding ring off of the coupling insert (15).
4. Remove the coupling insert (15) and dispose of it: refer to Section 6.2.
5. Fit the new coupling insert (15) to the gaps between the teeth on the drive hub (16) and coupling hub (14).
6. Turn the holding ring (17) so that the reference line on the holding ring is aligned with the split in the coupling insert (15), then slide the holding ring over the insert.
7. Tighten the set screws (3) to secure the holding ring (17) in place.
8. Use the four bolts (13) to secure one of the coupling covers (12) to the coupling housing (7). Tighten the bolts to a torque between 3 and 5 Nm (2.2 and 3.7 lbf ft).
9. Use the four bolts (13) to secure the other coupling cover (12) to the coupling housing (7). Tighten the bolts to a torque between 3 and 5 Nm (2.2 and 3.7 lbf ft).

5.13 Relubricate the motor bearings

5.13.1 General requirements

WARNING

Do not relubricate the motor bearings unless you have been suitably trained in the necessary procedures. If you are not suitably trained, you may damage the motor and it may not operate correctly or safely.

You must only relubricate the pump-motor bearings if you have been suitably trained in all of the procedures required to remove and refit the motor, to dismantle and reassemble the motor, and to relubricate the motor bearings.

Take note of the following when you relubricate the motor bearings:

- Refer to the guidelines given in Section 5.13.2 for the relubrication intervals.
- Use the procedures in this manual to remove and refit the motor.
- Only use approved procedures to dismantle and reassemble the motor, and to relubricate the motor bearings.
- We recommend that you use Esso Unirex N3 grease to relubricate 50 Hz motor bearings, and Chevron SRI No. 2 or Shell Oil Dolium-R to relubricate the 60 Hz motor bearings.
- Only relubricate the bearings if they are in a satisfactory condition. Use the amount of grease shown in Table 13. Do not put too much grease into the bearings, or the motor may overheat.

5.13.2 Relubrication intervals

The required interval between motor bearing relubrication depends on a number of factors, such as ambient temperature and so on. To determine the required intervals between relubrication:

- Refer to Table 14 which provides general guidelines on the required interval between relubrication.
- Refer also to the nameplate on the motor for relubrication intervals and grease quantities specific to that motor.

Note: The data given in Table 14 *is for an ambient temperature of 25 °C (77 °F). If the pump is operated in an ambient temperature of 40 °C (104 °F), the required relubrication intervals will be 50% of those shown in the table.*

Pump	Quantity of grease required	
	Non-drive end bearing	Drive end bearing
GV250, 380/400/415 V, 50 Hz	12 c.c.	12 c.c.
GV250, 230/460 V, 60 Hz	0.2 fluid oz	0.6 fluid oz
GV400, 380/400/415 V, 50 Hz	12 c.c.	12 c.c.
GV400, 230/460 V, 60 Hz	0.4 fluid oz	0.6 fluid oz

Table 13 - Motor relubrication grease required

Pump	Relubrication interval (hours of operation)
GV250, 380/400/415 V, 50 Hz	7200
GV250, 230/460 V, 60 Hz	4400
GV400, 380/400/415 V, 50 Hz	7200
GV400, 230/460 V, 60 Hz	4400

Table 14 - Motor bearing relubrication intervals

5.14 Replace the motor bearings

WARNING

Do not replace the motor bearings unless you have been suitably trained in the necessary procedures. If you are not suitably trained, you may damage the motor and it may not operate correctly or safely.

You must only replace the motor bearings if you have been suitably trained in all the procedures required to dismantle and reassemble the motor, and to replace the bearings.

Take note of the following when you replace the motor bearings:

- You will need a Motor bearing kit: refer to Section 7.3.
- Use the procedures in this manual to remove and refit the motor.
- Only use approved procedures to dismantle and reassemble the motor, and to replace the bearings.

5.15 Overhaul the pump

We recommend that the pump is given a major overhaul every three years. Such an overhaul is outside the scope of this manual and should be done by qualified BOC Edwards service personnel: contact your supplier or BOC Edwards.

5.16 Fault finding

Refer to Table 15 for fault finding.

Symptom	Check	Actions
The pump suddenly stops.	Is there a hydraulic lock in the pump ?	Switch off and drain the fluid from the pump. If necessary, turn the pump by hand.
	Has the shut-down thermal snap-switch operated to stop the pump because the pump is operating at too high a temperature ?	Check that there is a sufficient flow of cooling-water through the pump: check that the cooling-water supply is on, is at the correct pressure and is of the correct temperature.
	Has the cooling-water supply been interrupted, or has it failed ?	If your cooling-water supply is on and is at the correct pressure and temperature, the cooling jacket may be blocked: clean the cooling jacket (refer to Section 5.9).
	Has the pump seized because the shut-down thermal snap-switch is faulty ?	Check the operating temperature of the pump (at the position shown in Figure 1, item 3). If the operating temperature is > 100 °C (212 °F), there has been insufficient cooling-water flow through the pump and the thermal snap-switch is faulty: contact your supplier or BOC Edwards for advice.
	Has the pump seized due to deposits ?	Switch off the pump and contact your supplier or BOC Edwards.
The pump operates at too high a temperature or the pump temperature is unstable.	Is the cooling-water flow inadequate, is the flow variable, or is the flow being interrupted ?	Before you restart the pump, check for correct cooling-water flow (see above).
The pump continues to operate at a high temperature which may result in seizure.	Is the interstage relief valve stuck in the open position ?	Inspect the interstage relief valve and overhaul it or replace it if necessary (refer to Section 5.10).
The pump only achieves an ultimate pump-inlet pressure of 30 to 50 mbar (3×10^3 to 5×10^3 Pa, 22 to 37 torr).	Is the interstage relief valve stuck in the open position ?	See above.

Table 15 - Fault finding (Sheet 1 of 2)

Symptom	Check	Actions
The pump-motor trips out due to excessive electrical current consumption when the GV250 pump is operating with pump-inlet pressure in the range 300 to 1000 mbar (3.0×10^4 to 1×10^5 Pa, 225 to 750 torr), or when the GV400 pump is operating with pump-inlet pressure in the range 200 to 1000 mbar (2.0×10^4 to 1×10^5 Pa, 150 to 750 torr)	Is the interstage relief valve stuck in the closed position ?	Inspect the valve and if necessary replace it: refer to Section 5.10.
The gearbox and oil are contaminated with the process substances pumped.	Has the shaft-seal purge failed ? Have the seals in the pump failed ?	Check the pressure of the air or nitrogen purge flow to the shaft-seals; if necessary adjust the air or nitrogen pressure. Change the gearbox oil before you restart the pump (refer to Section 5.7). The seals must be replaced. Contact your supplier or BOC Edwards for advice.
The gearbox is noisy.	Is the oil level low ?	Check the oil level and fill as necessary (refer to Section 5.3).
The pump does not operate.	Is the pump-motor faulty ?	Make all the other appropriate checks in this table. If there is no other apparent cause for failure of the pump to operate, check the pump-motor and if necessary replace it (refer to Section 5.11).
-	-	If you cannot rectify a problem, or if you cannot identify the cause of a problem, contact your supplier or BOC Edwards for advice.

Table 15 - Fault finding (Sheet 2 of 2)

6 STORAGE AND DISPOSAL

6.1 Storage

Note: If you will store the pump in an environment with an ambient temperature below -14 °C (7 °F), you must also drain the oil from the pump: use the procedure in Section 5.7*, then refit the oil drain-plug to the pump before you store it.*

Store the pump as follows:

1. Ensure that the pump has been shut down as described in Section 4.4, then disconnect the pump from the electrical supply.
2. Refer to Figure 1. Place a suitable container under the cooling-water connections (2, 7), then remove your cooling-water supply and return pipelines from the connections and allow the cooling-water to drain from the pump.
3. Disconnect the shaft-seals purge air or nitrogen supply from the shaft-seals purge inlet (22). If fitted, disconnect the gas-ballast nitrogen supply from the gas-ballast system.
4. Disconnect the pump inlet (6) and outlet (13) from your process and exhaust pipelines.
5. Fit blanking-plates to the pump-inlet (6) and pump-outlet (13). Place protective covers over the pump services connection points.
6. Store the pump in clean dry conditions until required.
7. When required for use, prepare and install the pump as described in Section 3 of this manual.

6.2 Disposal

WARNING

Ensure that you wear the appropriate Personal Protective Equipment (PPE) when you handle contaminated oils or contaminated components.

Dispose of the pump, cleaning solution, deposits removed from the pump, used pump oil, grease and any components safely in accordance with all local and national safety and environmental requirements.

Take particular care with the following:

- Fluoroelastomers which may have decomposed as the result of being subjected to high temperatures.
- Components and oil which have been contaminated with dangerous process substances.

This page intentionally blank.

7 SPARES, SERVICE AND ACCESSORIES

7.1 Introduction

BOC Edwards products, spares and accessories are available from BOC Edwards companies in Belgium, Brazil, China, France, Germany, Israel, Italy, Japan, Korea, Singapore, United Kingdom, U.S.A and a world-wide network of distributors. The majority of these centres employ Service Engineers who have undergone comprehensive BOC Edwards training courses.

Order spare parts and accessories from your nearest BOC Edwards company or distributor. When you order, state for each part required:

- Model and Item Number of your equipment
- Serial number
- Item Number and description of part.

7.2 Service

BOC Edwards products are supported by a world-wide network of BOC Edwards Service Centres. Each Service Centre offers a wide range of options including: equipment decontamination; service exchange; repair; rebuild and testing to factory specifications. Equipment which has been serviced, repaired or rebuilt is returned with a full warranty.

Your local Service Centre can also provide BOC Edwards engineers to support on-site maintenance, service or repair of your equipment.

For more information about service options, contact your nearest Service Centre or other BOC Edwards company.

7.3 Spares and maintenance kits

Refer to Table 16 (page 47) for the spares and maintenance kits for the pumps.

7.4 Accessories

A number of accessories are available for the GV pumps; these are described in the following sections.

Refer to Table 17 (page 47) for the Item Numbers of these accessories.

7.4.1 Exhaust Silencers

Fit an exhaust silencer to attenuate the pulses in the exhaust pressure, and to reduce pump-induced resonance in your exhaust-extraction system.

7.4.2 Exhaust-Purge Kit

Fit an Exhaust-Purge Kit to allow you to connect an air or nitrogen exhaust-purge to the GV pump.

7.4.3 Booster Connection Kits

Use a Booster Connection Kit to allow you to fit an EH mechanical booster pump to the inlet of the GV pump.

7.4.4 Indirect Cooling Kits

Note: We recommend that you fit an Indirect Cooling Kit if you want to use the pump with an operating temperature in the range of 45 to 90 °C, 113 to 194 °F.

Fit an Indirect Cooling Kit to allow you to use indirect cooling on the GV pump. Two types of kit are available: fit a Kit with TCV (Thermostatic Control Valve) when you want to control the operating temperature of the GV pump.

7.4.5 Other accessories

A number of other accessories are available for the GV pumps, as listed below; contact your supplier or BOC Edwards for details of these accessories:

- Acoustic enclosure for the GV pump.
- Acoustic enclosure for the GV pump with mechanical booster pump.
- Pump motor acoustic jacket.
- Gas control system.
- Motor control module.
- Cooling-water control panel.

Spare/Kit	Item Number
BOC Edwards Ultralube 150 oil (1 litre, 0.25 US gallons)	H110-23-010
BOC Edwards Ultralube 150 oil (4 litres, 1 US gallons)	H110-23-011
Interstage (Pressure) Relief Valve (complete valve assembly)	A705-11-832
Routine Maintenance Kit	A705-01-825
Motor Fitment Kit	A705-01-805
Inlet End (Upper) Bearing Kit	A705-01-826
Air filter	A506-16-000
Swing PRV Overhaul Kit	A705-11-833
Motor Coupling Insert	A705-73-758
Motor Bearing Kits:	
GV 250 or GV400, 380/400/415 V, 50 Hz	A071-99-065
GV 250, 230/460 V, 60 Hz	A071-99-069
GV 400, 230/460 V, 60 Hz	A071-99-076

Table 16 - Spares Item Numbers

Accessory	Item Number
GV250/400 Exhaust Silencer	A505-71-000
GV250/400 Exhaust-Purge Kit	A505-68-000
GV250/400-EH250 Booster Connection Kit	A505-70-000
GV250/400-EH500 Booster Connection Kit	A505-73-000
GV250/400-EH1200/2600/4200 Booster Connection Kit	A505-69-000
GV250/400 Indirect Cooling Kit with TCV	A505-66-000
GV250/400 Indirect Cooling Kit	A505-67-000

Table 17 - Accessory Item Numbers

This page intentionally blank.

BOC EDWARDS

Form HS1

Return of BOC Edwards Equipment - Procedure

INTRODUCTION

Before returning your equipment, you must warn BOC Edwards if substances you used (and produced) in the equipment can be hazardous. This information is fundamental to the safety of our Service Centre employees and will determine the procedures employed to service your equipment.

Complete the Declaration (HS2) and send it to BOC Edwards before you dispatch the equipment. It is important to note that this declaration is for BOC Edwards internal use only, and has no relationship to local, national or international transportation safety or environmental requirements. As the person offering the equipment for shipment, it is your responsibility to ensure compliance with applicable laws.

GUIDELINES

- Equipment is '**uncontaminated**' if it has not been used, or if it has only been used with substances that are not hazardous. Your equipment is '**contaminated**' if it has been used with any substances classified as hazardous under EU Directive 67/548/EEC (as amended) or OSHA Occupational Safety (29 CFR 1910).
- If your equipment has been used with radioactive substances, biological or infectious agents, mercury, polychlorinated biphenyls (PCB's), dioxins or sodium azide, you must decontaminate it before you return it to BOC Edwards. You must send independent proof of decontamination (for example a certificate of analysis) to BOC Edwards with the Declaration (HS2). Phone BOC Edwards for advice.
- If your equipment is contaminated, you must either:
  - Remove all traces of contamination (to the satisfaction of laws governing the transportation of dangerous/hazardous substances).
  - Or, properly classify the hazard, mark, manifest and ship the equipment in accordance with applicable laws governing the shipment of hazardous materials.

Note: Some contaminated equipment may not be suitable for airfreight.

PROCEDURE

1. Contact BOC Edwards and obtain a Return Authorisation Number for your equipment.
2. Complete the Return of BOC Edwards Equipment - Declaration (HS2).
3. If the equipment is contaminated, you must contact your transporter to ensure that you properly classify the hazard, mark, manifest and ship the equipment, in accordance with applicable laws governing the shipment of contaminated/hazardous materials. As the person offering the equipment for shipment, it is your responsibility to ensure compliance with applicable law. **Note: Equipment contaminated with some hazardous materials, such as semiconductor by-products, may not be suitable for airfreight - contact your transporter for advice.**
4. Remove all traces of hazardous gases: pass an inert gas through the equipment and any accessories that will be returned to BOC Edwards. Where possible, drain all fluids and lubricants from the equipment and its accessories.
5. Seal up all of the equipment's inlets and outlets (including those where accessories were attached) with blanking flanges or, for uncontaminated product, with heavy gauge tape.
6. Seal equipment in a thick polythene/polyethylene bag or sheet.
7. If the equipment is large, strap the equipment and its accessories to a wooden pallet. If the equipment is too small to be strapped to a pallet, pack it in a suitable strong box.
8. Fax or post a copy of the Declaration (HS2) to BOC Edwards. The Declaration must arrive before the equipment.
9. Give a copy of the Declaration (HS2) to the transporter. You must tell your transporter if the equipment is contaminated.
10. Seal the original Declaration in a suitable envelope: attach the envelope securely to the outside of the equipment package, in a clear weatherproof bag.
    WRITE YOUR RETURN AUTHORISATION NUMBER CLEARLY ON THE OUTSIDE OF THE ENVELOPE OR ON THE OUTSIDE OF THE EQUIPMENT PACKAGE.

BOC EDWARDS

Form HS2

Return of BOC Edwards Equipment - Declaration

Return Authorisation Number:

You must:

- Know about all of the substances which have been used and produced in the equipment before you complete this Declaration
- Read the Return of BOC Edwards Equipment - Procedure (HS1) before you complete this Declaration
- Contact BOC Edwards to obtain a Return Authorisation Number and to obtain advice if you have any questions
- Send this form to BOC Edwards before you return your equipment

SECTION 1: EQUIPMENT

Equipment/System Name_____

Part Number _____

Serial Number_____

Has the equipment been used, tested or operated ?

YES ❑ Go to Section 2 NO ❑ Go to Section 4

IF APPLICABLE:

Tool Reference Number_____

Process _____

Failure Date_____

Serial Number of Replacement Equipment_____

SECTION 2: SUBSTANCES IN CONTACT WITH THE EQUIPMENT

Are any substances used or produced in the equipment:

- Radioactive, biological or infectious agents, mercury, poly chlorinated biphenyls (PCBs), dioxins or sodium azide? (if YES, see Note 1) YES ❑ NO ❑
- Hazardous to human health and safety? YES ❑ NO ❑

Note 1 : BOC Edwards will not accept delivery of any equipment that is contaminated with radioactive substances, biological/infectious agents, mercury, PCB's, dioxins or sodium azide, unless you:

- Decontaminate the equipment
- Provide proof of decontamination

YOU MUST CONTACT BOC EDWARDS FOR ADVICE BEFORE YOU RETURN SUCH EQUIPMENT

SECTION 3: LIST OF SUBSTANCES IN CONTACT WITH THE EQUIPMENT

Substance name	Chemical Symbol	Precautions required (for example, use protective gloves, etc.)	Action required after a spill, leak or exposure

SECTION 4: RETURN INFORMATION

Reason for return and symptoms of malfunction _____

_____

If you have a warranty claim:

- who did you buy the equipment from ? _____
- give the supplier's invoice number_____

SECTION 5: DECLARATION

Print your name:_____Print your job title:_____

Print your organisation:_____

Print your address:_____

_____

Telephone number: _____Date of equipment delivery: _____

I have made reasonable enquiry and I have supplied accurate information in this Declaration. I have not withheld any information, and I have followed the Return of BOC Edwards Equipment - Procedure (HS1).

Note: Please print out this form, sign it and return the signed form as hard copy.

Signed: _____Date_____

This page intentionally blank.

UNITED KINGDOM

CORPORATE HEADQUARTERS
BOC EDWARDS
Manor Royal
Crawley
West Sussex
RH10 9LW
Tel +(44) 1293 528844
Fax +(44) 1293 533453

BOC EDWARDS
Wingates Industrial Estate
Great Bank Road
Westhoughton, Bolton
Lancashire
BL5 3SL
Tel +(44) 1942 652652
Fax +(44) 1942 652651

AMERICA (USA)

USA HEADQUARTERS
BOC EDWARDS
One Edwards Park
301 Ballardvale Street
Wilmington, MA 01887
Tel +(1) 978 658 5410
Toll free (USA only) 1 800 848 9800
Fax +(1) 978 658 7969

3901 Burton Drive
Santa Clara, CA 95054
Tel +(1) 408 496 1177
Fax +(1) 408 496 1188

1810 West Drake Drive
Suite 101
Tempe, AZ 85283
Tel +(1) 602 777 7007
Fax +(1) 602 777 2244

11701 Stonehollow Drive
Suite 100
Austin, TX 78758
Tel +(1) 512 491 6622
Fax +(1) 512 491 0629

3501 Island Avenue
Philadelphia, PA 19153
Tel +(1) 215 365 8653
Fax +(1) 978 753 6846

BELGIUM

BOC EDWARDS
Bergensesteenweg 709
B1600 Sint-Pieters-Leeuw
Brussels
Tel +(32) 2 363 0030
Fax +(32) 2 363 0064

BRAZIL

BOC DO BRASIL LTDA
DIVISÃO EDWARDS ALTO VACO
Rua Bernado Wrona 222
02710 São Paulo-SP
Tel +(55) 11 3952 5000
Fax +(55) 11 3965 2766

CANADA

BOC EDWARDS
5975 Falbourne Street
Mississauga, Ontario L5R3W6
Canada
Tel +(1) 905 501 2558
Fax +(1) 905 501 1632

12055 Cote de Liesse
Dorval, Quebec H9P1B4
Canada
Tel +(1) 514 631 3501
Fax +(1) 514 631 3502

CHINA

BOC TRADING
(SHANGHAI) CO. LTD.
23 Fu Te Road (N)
Wai Gao Qiao Free Trade Zone
Pudong
Shanghai, 200131
PRC China
Tel +(86 21) 5866 9618
Fax +(86 21) 5866 9993

FRANCE

BOC EDWARDS
125 Avenue Louis Roche
92238 Gennevilliers, Cedex
Paris
Tel +(33) 1 47 98 24 01
Fax +(33) 1 47 98 44 54

GERMANY

BOC EDWARDS
Ammerthalstraße 36
85551 Kirchheim
Munich
Tel +(49) 89 99 19 18 0
Fax +(49) 89 99 19 18 99

HONG KONG S.A.R.

BOC EDWARDS (ASIA)
12 Chun Yat Street
Tseung Kwan O Industrial Estate
Tseung Kwan O, Kowloon
Hong Kong S.A.R.
Tel +(852) 2372 2640
Fax +(852) 2796 9095

INDIA

BOC EDWARDS
DIVIN. OF BOC INDIA LIMITED
203 Surya Kiran Building
19 Kasturba Gandhi Marg
New Delhi - 110 001
India
Tel +(91) 11 851 0065
Fax +(91) 11 851 0245

ISRAEL

EDWARDS ISRAEL VACUUM LTD.
5 Habarzel Blvd
Gat 2000 Industrial Zone
Qiryat Gat 82000
Tel +(972) 8 681 0633
Fax +(972) 8 681 0640

ITALY

BOC EDWARDS
Via Carpaccio 35
20090 Trezzano sul Naviglio
Milan
Tel +(39) 02 48 4471
Fax +(39) 02 48 401638

JAPAN

HEADQUARTERS
BOC EDWARDS
Shuwa Shiba Park Building A-3F
2-4-1 Shibakoen Minato-ku
Tokyo, 105-0011
Tel +(81) (0) 3 5470 6530
Fax +(81) (0) 3 5470 6521

KOREA

HEADQUARTERS
SONGWON EDWARDS LTD.
5th FL. Daewoo Engineering Bldg.
Soonae-dong
Bundang-gu, Sungnam City
Kyungki-do, Korea
Tel +(82) 31 716 7070
Fax +(82) 31 738 1001-3

FACTORY & GV
SONGWON EDWARDS LTD.
625-7 Upsong-dong
Chunan City
Chungchong Nam-do
Korea
Tel +(82) 41 621 7070
Fax +(82) 41 621 7700

SINGAPORE

BOC EDWARDS (ASIA)
42 Loyang Drive
Loyang Industrial Estate
Singapore 508962
Tel +(65) 6546 8408
Fax +(65) 6546 8407

TAIWAN, R.O.C.

EDWARDS TECHNOLOGIES
LIMITED
No. 434 Chung hua Road
Toufen Town, Miaoli County
Taiwan ROC
Tel +(886) 37 611422
Fax +(886) 37 611401

P800-80-000 Issue J 01A09-010

PLEASE CONTACT ANY OF THESE COMPANIES FOR DETAILS OF OTHER SALES AND SERVICE CENTRES IN YOUR AREA.

BOC Edwards is part of BOC Limited. BOC Edwards and the stripe symbol are trade marks of The BOC Group.
© BOC Edwards 2003

Produced by Technical Publicity Techpublicity@edwards.boc.com

http://www.bocedwards.com
info@bocedwards.com

BOC EDWARDS