REVISION	DESCRIPTION	DATE	APPROVAL

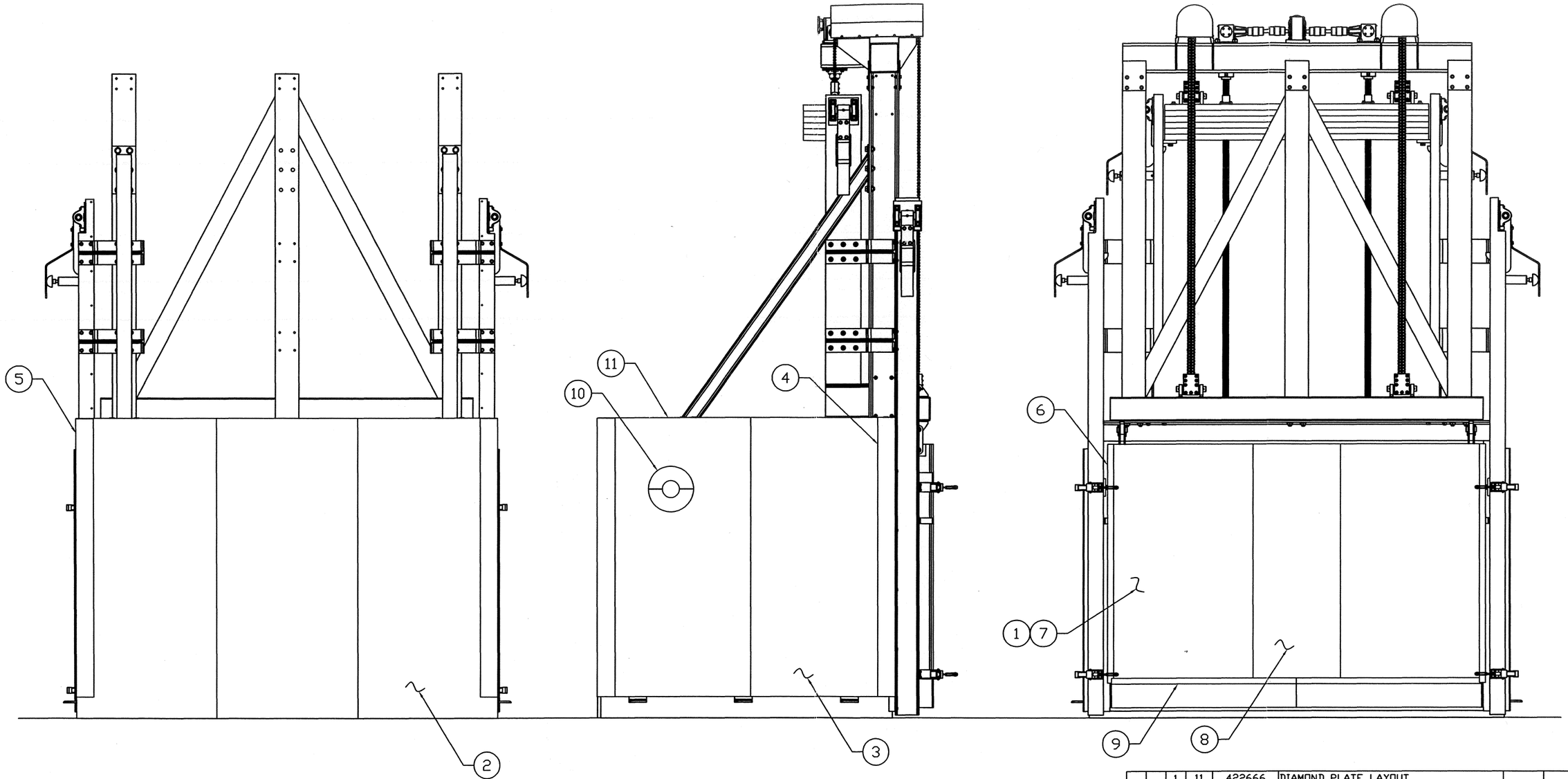

G3	G2	G1	ITEM	DWG NO.	DESCRIPTION	MAT'L	QTY	DELIV	P.O. #	CODE
		1	11	422666	DIAMOND PLATE LAYOUT					
		1	10	422781	CHAMBER PUMPING PORT EXTERIOR COVER					
		2	9	422780	CHAMBER DOOR BOTTOM EXTERIOR SHIELDING					
		1	8	422779-G2	CHAMBER DOOR EXTERIOR SHIELDING					
		2	7	422779-G1	CHAMBER DOOR EXTERIOR SHIELDING					
		2	6	422778	CHAMBER DOOR CORNER EXTERIOR SHIELDING					
		2	5	422777	REAR CORNER EXTERIOR SHIELDING					
		2	4	422776	FRONT CORNER EXTERIOR SHIELDING					
		4	3	422662	CHAMBER EXTERIOR SHIELDING LEFT & RIGHT SIDE					
		3	2	422615-G1	CHAMBER EXTERIOR SHIELDING					
		2	1	422596	CHAMBER INSULATION LAYOUT					

QUANTITY — BILL OF MATERIAL — PURCHASING

TOLERANCE UNLESS OTHERWISE SPECIFIED
X. +/- .3
.X +/- .1
.XX +/- .03
.XXX +/- .010
ANGLE +/- .5 DEG
125 FINISH
USE WATER SOLUBLE CUTTING FLUID

DYNAVAC
110 INDUSTRIAL PARK ROAD
Hingham, MA 02043

CHAMBER EXTERIOR SHIELDING ASSEMBLY

G#	NEXT ASSY	QTY	USED ON	QTY				
1	422651	1	9356	1	SCALE	1:18		
					DRAWN	RAP	04/23/02	DRAWING NO 422616 REV –
					CHECK			
					APPD			REF SHEET 1 OF 1

APPLICATION

PTB SALES

FOR SALES AND SERVICE PLEASE CALL:

PTB SALES T :: 626.334.0500
service@ptbsales.com
www.ptbsales.com

DATE SERVICED: _____

VIEW OUR INVENTORY