REVISION	DESCRIPTION	DATE	APPROVAL
A	MODIFIED QTY OF ITEM #8 WAS 124, ITEM #9 WAS 375 & ADDED ITEM #28&29 TO DWG	04/24/02	RAP
B	ADDED ITEM'S 30, 31 & 32 TO DWG B/M	05/31/02	RAP

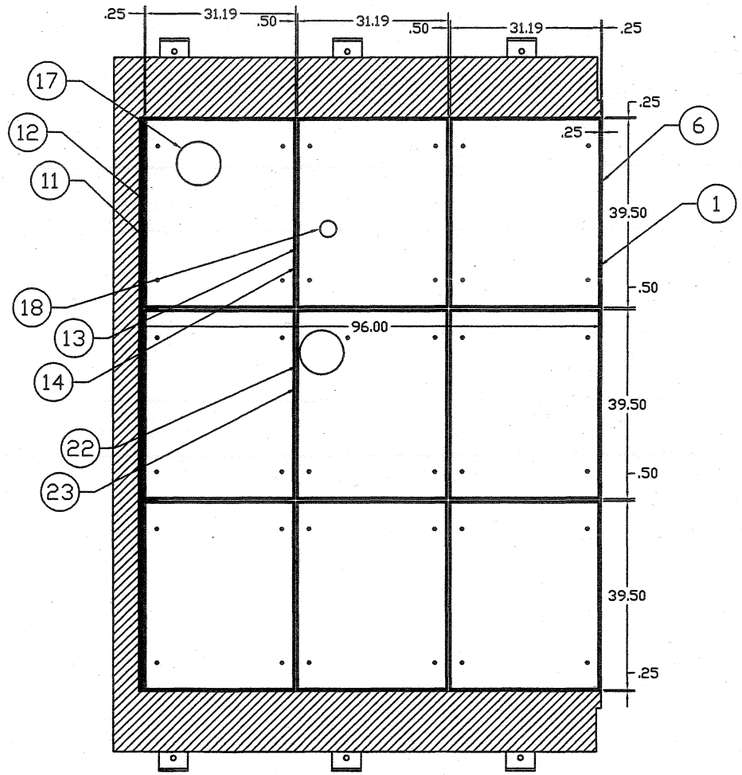

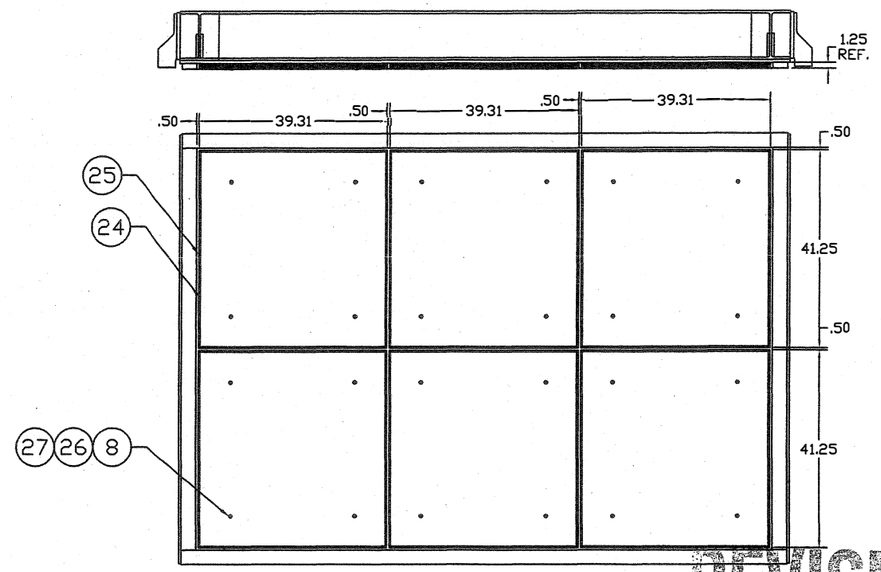

CHAMBER DOOR LAYOUT

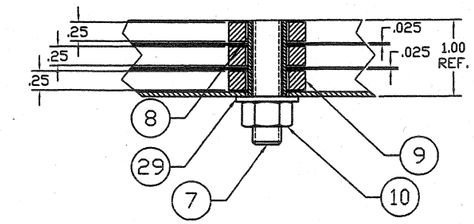

CHAMBER WALLS

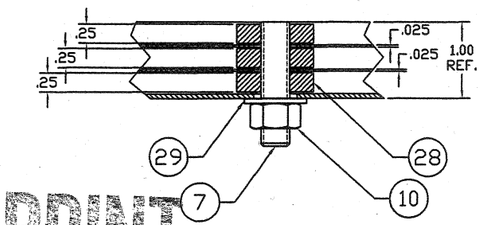

CHAMBER CEILING

REVISED PRINT

06-03-02

DESTROY ALL PREVIOUS COPIES

9356 07

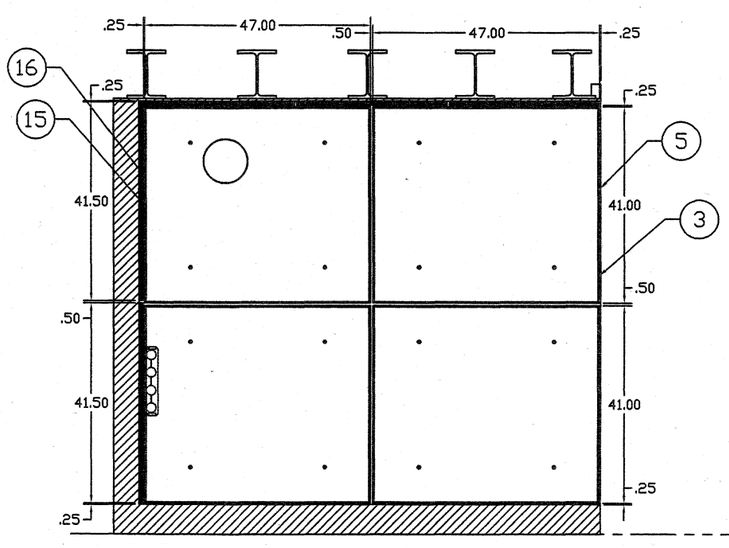

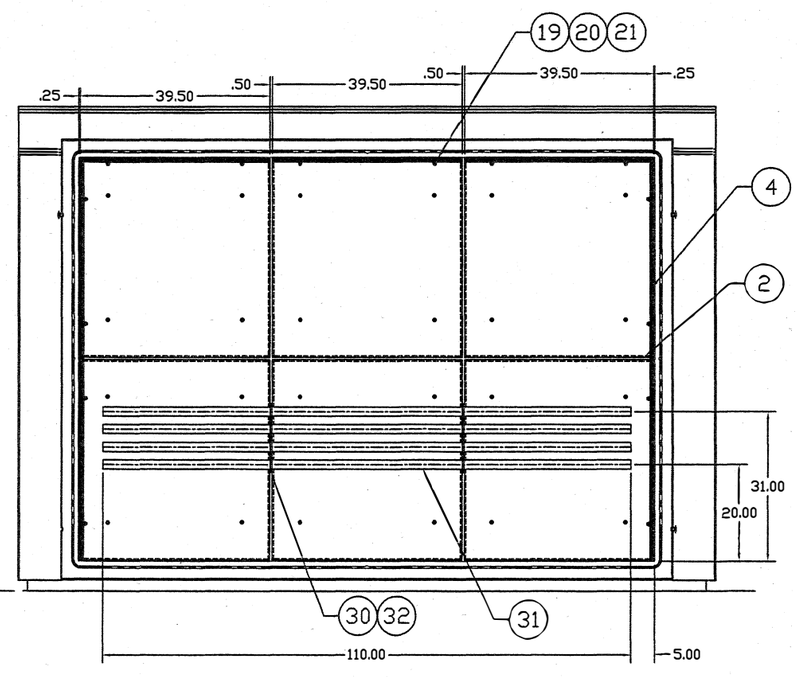

G3	G2	G1	ITEM	DWG NO.	DESCRIPTION	MAT'L	QTY	DELIV	P.O. #	CODE
		4	32		HEX HD BOLT, 1/4-20 X 1.25" LG. W/NUT	SS				
		4	31		PIPE, 1.50 SCH 80 X 10' LG.	SS				
B		2	30	422868	BUMPER GUARD RAILING MOUNT					
		100	29		FLT WASHER, 3/8-16	SS				
A		108	28	222792	CHAMBER INSULATION WASHER (CEILING)					
A		24	27		JAM NUT, 3/8-16	SS				
		24	26		THREADED ROD, 3/8-16 X 1.25" LG.	SS				
		12	25	322669	CHAMBER DOOR WALL PANEL					
		6	24	322668	CHAMBER DOOR WALL COVER					
		1	23	322657	CHAMBER CEILING COVER W/Ø8.63 CUT-OUT (#2)					
		2	22	322656	CHAMBER CEILING PANEL W/Ø8.63 CUT-OUT (#2)					
		1	21		MIXER NOZZLE, MCMASTER #74695A12					
		1	20		ADHESIVE GUN, MCMASTER #74695A71					
		1	19		EPOXY, SLOW SET, MCMASTER #66195A13					
		1	18	322661	INSULATION RING FOR Ø2.88 CUT-OUT					
		3	17	322660	INSULATION RING FOR Ø8.63 CUT-OUT					
		1	16	322659	CHAMBER CEILING COVER W/Ø8.63 CUT-OUT (#3)					
		2	15	322658	CHAMBER CEILING PANEL W/Ø8.63 CUT-OUT (#3)					
		1	14	322655	CHAMBER CEILING COVER W/Ø2.88 CUT-OUT					
		2	13	322654	CHAMBER CEILING PANEL W/Ø2.88 CUT-OUT					
		1	12	322653	CHAMBER CEILING COVER W/Ø8.63 CUT-OUT (#1)					
		2	11	322652	CHAMBER CEILING PANEL W/Ø8.63 CUT-OUT (#1)					
		100	10		HEX NUT, 3/8-16	SS				
A		267	9	222647	CHAMBER INSULATION WASHER					
A		88	8		RD. TUBE, .50" OD X .049 WT X 1.00" LG.	SS				
		100	7		THREADED ROD, 3/8-16 X 1.50" LG.	SS				
		6	6	322646	CHAMBER CEILING COVER					
		7	5	322645	CHAMBER SIDE WALL COVER					
		6	4	322644	CHAMBER BACK WALL COVER					
		14	3	322642	CHAMBER SIDE WALL PANELS					
		12	2	322641	CHAMBER BACK WALL PANELS					
		12	1	322640	CHAMBER CEILING PANELS					

QUANTITY — BILL OF MATERIAL — PURCHASING

TOLERANCE UNLESS OTHERWISE SPECIFIED
X. +/- .3
.X +/- .1
.XX +/- .03
.XXX +/- .010
ANGLE +/- .5 DEG
125 FINISH
USE WATER SOLUBLE CUTTING FLUID

DYNAVAC
110 INDUSTRIAL PARK ROAD
Hingham, MA. 02043

CHAMBER INTERNAL PANEL ASSEMBLY

G#	NEXT ASSY	QTY	USED ON	QTY				
1	422651	1	9356	1	SCALE	1:16		
					DRAWN	RAP	03/18/02	DRAWING NO 422643 REV B
					CHECK			
	APPLICATION				APPD			REF — SHEET 1 OF 1